Clear Form

HACH® ULTRA MAG

ULTRA MAG 3000 AND ULTRA MAG 5000

ELECTROMAGNETIC FLOW METER
WITH EITHER PROCOMM MAX OR PROCOMM GO CONVERTER

SUBMITTAL PACKAGE

From

McCROMETER
3255 WEST STETSON AVENUE
HEMET, CA 92545

Phone (951) 652-6811
Toll Free (800) 220-2279
Fax (951) 652-3078

www.mccrometer.com

Date:

Project Description

Project Name:	
Purchase Order No.:	
Date:	
Customer Name:	
Submitted By:	
Other Project Information:	

When completing this submittal package, it must also include the Muni Mag Meter Part and Price Configurator, which is also an electronic document. A version without pricing can be downloaded from the McCrometer web site with the following link.

Muni Mag Part and Price Configurator

The Muni Mag Meter Part and Price Configurator is a macro-enabled Excel spreadsheet that contains multiple drop down fields for multiple product configurations. After it is filled out, save the spreadsheet under a different name and submit the file with the submittal package.

You can request a version of the Configurator with pricing by contacting McCrometer Customer Service or Inside Sales. Their contact information is on the McCrometer Web site.

See the following specification sheet and drawings for sizing and option details.

Equipment Selection for Ultra Mag 3000

PART NUMBER	DESCRIPTION		METER 1 QTY.	METER 2 QTY.	METER 3 QTY.
Standard Equipment					
Ultra Mag Flow Meter					
Standard meter					
Hazardous location meter					
	ProComm Go Transmitter • Battery power standard • Two digital pulse outputs • Data logger				
	Notes on standard equipment on Ultra Mag flow meters: • UltraLiner™ technology with NSF fusion bonded epoxy coating • Stainless Steel Electrodes • 2-Year Warranty				
Sensor Options					
	Flanges				
	Additional sensor cable: Specified total length in feet (leave blank for none)				
Special	Compression Gland Seals (instead of Quick Connects at sensor)				
Transmitter Options					
	Power Options	10 to 35 VDC			
		100 to 240 VAC			
	Communications Options (select all that apply)	SmartTrax			
		AMI Smart Output (Sensus, Itron 6, Itron 9)			
	Output Option	4-20mA (passive)			

Equipment Selection for Ultra Mag 5000

PART NUMBER	DESCRIPTION		METER 1 QTY.	METER 2 QTY.	METER 3 QTY.
Standard Equipment					
Ultra Mag Flow Meter					
Standard meter					
Hazardous location meter					
	ProComm Max Transmitter • IP67 Enclosure • Six-Button Key Pad • 100-240 VAC (10W) • Back-Lit Graphical LCD Display • Two programmable opto-isolated digital outputs • 4-20mA (active or passive, selected via menu)				
	Notes on standard equipment on Ultra Mag flow meters: • UltraLiner™ technology with NSF fusion bonded epoxy coating • Stainless Steel Electrodes • 2-Year Warranty				
Sensor Options					
	Flanges				
	Additional sensor cable: Specified total length in feet (leave blank for none)				
Special	Compression Gland Seals (instead of Quick Connects at sensor)				
Transmitter Options					
	Power Options	10 to 35 VDC			
	Communications Options (select all that apply)	HART			
		Modbus RTU (RS485)			
		Ethernet IP			
		SmartTrax			
		AMI Smart Output (Sensus, Itron 6, Itron 9)			
	Output Option	4-20mA (active or passive)			

Project Notes

Meter 1:

Meter 2:

Meter 3:

Project Submission **1**

Project Description 1
Equipment Selection for Ultra Mag 3000 2
Equipment Selection for Ultra Mag 5000 3
Project Notes 4

Ultra Mag 3000 . . . . . **6**

Ultra Mag 3000 Suggested Specifications 6
Ultra Mag 3000 Product Specifications 9
Ultra Mag 3000 Flow Meter Dimensions 11
Ultra Mag 3000 Part Number Matrix. 14
Sensor Grounding and Electrical Interference 16

ProComm GO Transmitter **17**

ProComm Go Transmitter Specifications 17
ProComm Go Transmitter Dimensions 19
Transmitter Cable Connections from Sensor. 20
ProComm Go Battery Installation and Connection 22

Ultra Mag **23**

Ultra Mag 5000 Suggested Specifications 23
Ultra Mag 5000 Product Specifications 26
Ultra Mag 5000 Flow Meter Dimensions 28
Ultra Mag 5000 Part Number Matrix. 31
Sensor Grounding and Electrical Interference 33

ProComm Max Transmitter **34**

ProComm Max Transmitter Specifications 34
ProComm Max Transmitter Dimensions 35
ProComm Max Transmitter Wiring Connection 37
ProComm Max Expansion Cards 38
ProComm Max Transmitter Power Hook-Up 39
4-20mA Hook-Up 40

Ultra Mag 3000 Suggested Specifications

PART 1 - GENERAL

1.1 SCOPE

This section describes the requirements for an electromagnetic flow meter and microprocessor-based signal transmitter. Under this item, the contractor shall furnish and install the mag meter equipment and accessories as indicated on the plans and as herein specified.

1.2 SUBMITTALS

The following information shall be included in the submittal for this section:

1. Data sheets and catalog literature for the magmeter and the microprocessor-based signal transmitter.
2. Connection diagrams for equipment wiring.
3. List of spare parts and optional equipment.

PART 2 - PRODUCTS

2.1 ELECTROMAGNETIC FLOWMETER (MAG METER)

The electromagnetic flow meter shall consist of a flow sensor based on Faraday's Law of Electromagnetic Induction and microprocessor-based signal transmitter.

A. Sensor:

1. Operating principle: Utilizing Faraday's Law of Electromagnetic Induction, the flow of liquid through the sensor induces an electrical voltage that is proportional to the velocity of the flow.
2. Construction:
    a. The sensor flow tube shall be NEMA 6P or IP68 rated.
    b. Flow tube shall be constructed of 304 Stainless Steel.
    c. The liner material shall be Ultra Liner NSF approved fusion bonded epoxy. The liner shall carry a lifetime guarantee.
    d. Measurement and grounding electrodes shall be 316 Stainless Steel.
        1) Optional: Hastelloy C276 Electrodes shall be available for when corrosive fluids are present.
    e. Connecting flanges shall be AWWA 150# (Optional 300# service shall be available) Flat Face Carbon Steel.
3. ANSI Flanges shall be available when required.
4. Two Stainless Steel grounding rings shall be supplied with each flow meter.
5. Installation:
    a. A minimum of 0 pipe diameters up stream and 0 pipe diameter downstream are recommended for sizes 1.5" – 3"
    b. A minimum of 2 pipe diameters up stream and 1 pipe diameter downstream are recommended for sizes 4" – 24"

d. Manufacturer shall offer optional Quick Connect cabling for remote mounted installations.

e. Repeatability: ±0.05% or ±.0008ft/s (±0.25mm/s), whichever is greater

f. Conductivity: Minimum 5 µs/cm

g. Optional meter mounted transmitter.

h. Bi-directional flow capabilities shall be standard.

i. Flow Direction Measurement: Forward and reverse flow indication and forward, reverse, net totalization is standard on all meters.

11. The electromagnetic flow meter shall be a McCrometer Ultra Mag or approved equal.

2.2 SPARE PARTS

A. Spare parts for the equipment shall include the following, unless otherwise noted:

1. Extra operation manuals as required.

2.3 OPERATOR FUNCTIONS

A. Calibration

1. Each flow sensor shall have a 3 or 5- point wet flow calibration of the complete meter flow tube and its signal transmitter. The calibration facilities must be traceable to the National Institute of Standards and Technology (N.I.S.T). All the calibration information and factory settings matching the sensor shall be stored in an integrally mounted memory unit. The memory unit shall store sensor calibration data and signal transmitter settings for the lifetime of the product. At initial commissioning, the flow meter commences measurement without any initial programming. Any customer specified settings are downloaded to the memory unit. Should the signal transmitter need to be replaced, the new signal transmitter will upload all previous settings and resume measurement without any need for reprogramming or rewiring.
2. Manufacturer shall provide a calibrated meter set which includes the sensor tube, the cabling and the transmitter.
3. An N.I.S.T. certificate of calibration shall accompany each flow sensor.

PART 3 - EXECUTION

3.1 INSTALLATION

A. Follow manufacturer's recommendation for the minimum upstream and downstream installation requirements for the flow sensor.

B. Wiring between flow sensors and remote mounted signal transmitters shall use cable type and procedures as per the manufacturers' recommendations.

Ultra Mag 3000 Suggested Specifications

3.2 MANUFACTURER'S ASSISTANCE

A. Warranty

1. The manufacturer of the electromagnetic flow meter shall provide a two-year warranty that the equipment shall be free from defects in design, workmanship, or materials. Extended warranties up to five years shall be available for additional cost.
2. The manufacturer of the electromagnetic flow meter shall provide a Lifetime Guarantee on the flow tubes Ultra Liner fusion bonded epoxy liner.
3. In the event a component fails to perform as specified or is proven defective in service during the guarantee period, the manufacturer shall promptly repair or replace the defective part at no cost to the owner.

Ultra Mag 3000 Product Specifications

All specifications apply to both Ultra Mag 3000 and Ultra Mag 5000 models except where noted.

Physical Specifications

Measurement Method	Electromagnetic flow based on Faraday's Law
Directionality	Forward and reverse flow indication and forward, reverse, net totalization are standard with all meters
Pipe Sizes	Ultra Mag 3000: 1½, 2", 2½, 3", 4", 6", 8", 10", 12", 14", 16", 18", 20", 24" Ultra Mag 5000: 1½, 2", 2½, 3", 4" 6", 8", 10", 12", 14", 16", 18", 20", 24", 30", 36", 42", 48"
Body Style	Flanged tube
Liner	206N
Electrodes	Type 316 stainless steel, Hastelloy optional
Electrode Shape	Standard shape
Electrical Connections	• Compression gland seals • Quick-Connect
Signal Transmitter	• Ultra Mag 3000: ProComm GO transmitter • Ultra Mag 5000: ProComm Max transmitter
Transmitter Mount	Either meter mount or remote mount
Sensor Cable Lengths	• **Standard**: 25'/7.6 m McCrometer supplied submersible cable with each remote mount unit. • **Optional:** Up to 500'/152.4 m, or 25'/7.6 m max for ProComm GO • **Custom Quick Connect:** Available in standard cable lengths: Feet: 25, 50, 75, 100, 125, 150, 175, 200, 500 Meters: 7.6, 15.25. 22.5, 30.5, 38.1, 45.75, 53.3, 61, 152.4 Custom quick connect cables at additional cost.

Performance and Operational Specifications

Operating Temperature	-10 to 60 °C (14 to 140 °F)
Storage Temperature	-15 to 60 °C (5 to 140 ° F)
IP Rating	• Quick Connect (NEMA 6P/IP68 with remote transmitter) • Compression gland seals (NEMA 6P/IP68 with remote transmitter)
Sensor Submersibility Depth	**With standard strain relief cable:** 1.8 m (6 ft.) **With optional quick connect cable:** 9 m (30 ft.)
Pressure Rating	• AWWA CL D, 150 PSI maximum working pressure • ANSI #150, 285 PSI maximum • ANSI #300, 500 PSI maximum
Velocity Range	0.2 to 32 FPS

Ultra Mag 3000 Product Specifications

Performance and Operational Specifications (cont.)

Accuracy	• Ultra Mag 3000: Battery powered: 1% of measured value ±0.006 ft/s (±0.0018 m/s) • Ultra Mag 5000: Standard: +/- 0.5% of measured value ±0.006 ft/s (±0.0018 m/s) Optional: +/- 0.2% of measured value ±0.006 ft/s (±0.0018 m/s) **IMPORTANT NOTICE ON FLOW METER ACCURACY:** The Ultra Mag 3000 flow meter with remote display's cable and electronics are factory calibrated for accuracy as a single unit. Changing the cable length, even with the splice kit, changes the accuracy of the meter and invalidates the calibration certificate. The Ultra Mag 5000 flow meter does not have this restriction. Multiple point wet flow calibrations are conducted on every complete flow tube with its signal transmitter. If desired, the tests can be witnessed by the customer. The McCrometer test facilities are traceable to the National Institute of Standards & Technology. Uncertainty relative to flow is ±0.15%.
Repeatability	±0.05% or ±.0008ft/s (±0.25mm/s), whichever is greater
Head Loss	None. No obstruction in line and no moving parts
Conductivity	5 µs/cm
Pipe Run Requirements	**3000:** 1½" to 3" Flanged style meters — 0D upstream / 0D downstream 4" - 24" Steel flanged meters — 2D upstream / 1D downstream **5000:** 1½" to 3" Flanged style meters — 0D upstream / 0D downstream 4" - 48" Steel flanged meters — 1D upstream / 0D downstream

Other Specifications

Certifications and Approvals	**Ultra Mag 3000**
	
	Standard model:
	• ISO 9001:2015 certified quality management system
	• Certified by MET to UL 61010-1
	• Certified to NSF / ANSI Standards*
	
	HL Model:
	• ISO 9001:2015 certified quality management system
	• Certified by MET to UL 61010-1 and MET C22.2 No. 61010-1-04
	  • Class I, Division 2, Groups A B C D, T4
	  • Class I, Zone 2, IIC T4
	• Certified to NSF / ANSI Standards*
	
	Ultra Mag 5000
	• ISO 9001:2015 certified quality management system
	• Certified to NSF / ANSI Standards*

System Options	Stainless steel ID tag
Meter Options and Accessories	• Extended warranty • Hastelloy® electrodes • ANSI flanges • Special lay lengths, including ISO standard lay lengths • Additional sensor cable up to 475' • Quick connect cable fittings • Transmitter sun shield • Smart Output™ (Sensus or Itron compatible) • Battery or battery-solar powered transmitter (ProComm GO only)
Warranty	**Meter:** 2 year warranty **Liner:** Lifetime guarantee

* Certified by IAPMO R&T to NSF/ANSI 61 for material safety and NSF/ANSI 372 for low lead content.

Ultra Mag 3000 Flow Meter Dimensions

1½" to 3" Models

Pipe Size (Nominal)	Flow Ranges (0.2 to 32 FPS) Min-Max GPM	DIMENSIONS (Lay Lengths)							Est. Shipping Weight (lbs.)*	
		A		B	C		D			
		CL150 ANSI 150#	CL300 ANSI 300#		CL150 ANSI 150#	CL300 ANSI 300#	CL150 ANSI 150#	CL300 ANSI 300#	CL150 ANSI 150#	CL300 ANSI 300#
1 ½"	1.29-200	11	14	4.5	5.0	6.1	6.5	7.25	93	not offered
2"	1.29-200	11	14	4.5	6.0	6.5	6.5	7.25	93	70
2 ½"	3.25-510	13.4	15.5	4.5	7.0	7.5	7.0	7.75	94	not offered
3"	3.25-510	13.4	15.5	4.5	7.5	8.25	7.0	7.75	94	80

* For remote mount meters, add 4 lbs for ProComm Max transmitter.

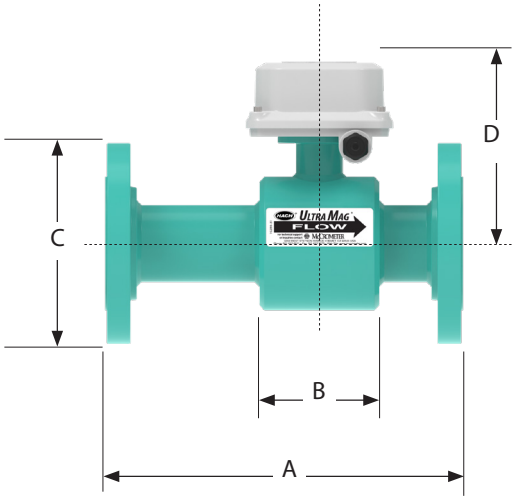

Ultra Mag 3000 Flow Meter Dimensions

4" to 12" Flanged End Body Style

Pipe Size (Nominal)	Flow Ranges (0.2 to 32 FPS) Min-Max GPM	DIMENSIONS (Lay Lengths)											Est. Shipping Weight (lbs.)*		
		A					B			C					
		AWWA	ANSI		ISO ANSI		AWWA	ANSI		AWWA	ANSI		AWWA	ANSI	
		150# Class D	150# CL150	300# CL300	150# CL150	300# CL300	150# Class D	150# CL150	300# CL300	150# Class D	150# CL150	300# CL300	150# Class D	150# CL150	300# CL300
4"	6.97-1110	13.4	13.4	13.4	9.00	10.00	9.0	9.0	10.0	9.25	9.25	9.25	86	167	167
6"	16.1-2560	14.6	14.6	14.6	11.00	12.50	11.0	11.0	12.5	10.25	10.25	10.25	98	186	186
8"	29.2-4670	16.1	17.25	17.25	13.50	15.00	13.5	13.5	15.0	11.25	11.25	11.25	118	250	250
10"	46.3-7400	18.5	18.5	18.5	16.00	17.50	16.0	16.0	17.5	12.5	12.5	12.5	168	290	290
12"	67.3-10760	19.7	19.7	19.7	19.00	20.50	19.0	19.0	20.5	13.5	13.5	13.5	210	350	350

*Shipping weights are estimated and may change due to specific order packaging

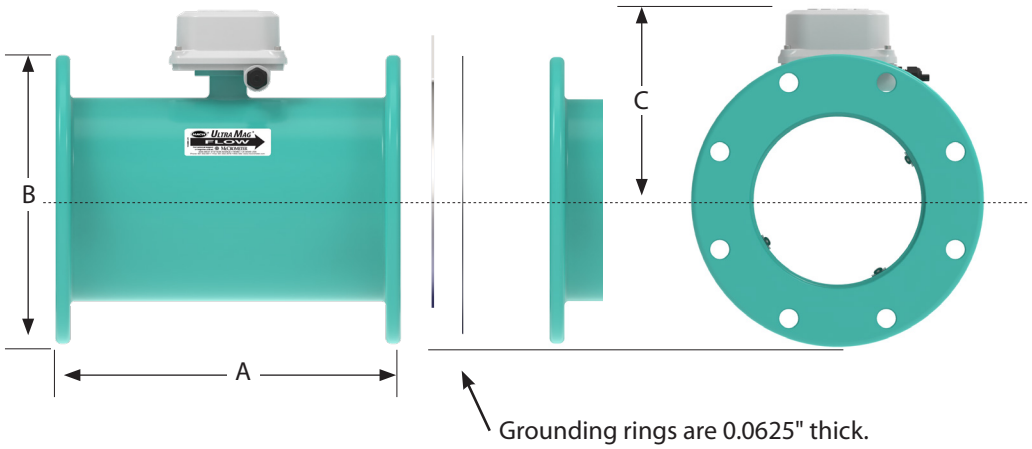

Ultra Mag 3000 Flow Meter Dimensions

14+" Flanged End Body Style

Pipe Size (nom.)	Flow Ranges (0.2 to 32 FPS) Min-Max GPM	DIMENSIONS												Est. Shipping Weight (lbs.)*			
		A						B	C				D**				
		AWWA		ANSI		ISO ANSI			AWWA		ANSI			AWWA		ANSI	
		150# Class D	300# Class F	150# CL150	300# CL300	150# CL150	300# CL300		150# Class D	300# Class F	150# CL150	300# CL300		150# Class D	300# Class F	150# CL150	300# CL300
14"	90.1-14410	21.70	22.75	22.75	22.75	21.00	23.00	10.38	21.00	23.00	21.00	23.00	13.56	290	370	370	550
16"	117-18670	23.60	25.25	25.25	25.25	23.50	25.50	12.38	23.50	25.50	23.50	25.50	14.31	352	443	443	639
18"	149-23820	23.60	25.25	25.25	25.25	25.00	28.00	12.38	25.00	28.00	25.00	28.00	15.31	400	492	492	801
20"	186-29600	25.60	28.25	28.25	28.25	27.50	30.50	14.38	27.50	30.50	27.50	30.50	16.25	465	603	603	973
24"	269-43040	30.70	35.75	35.75	35.75	32.00	36.00	18.88	32.00	36.00	32.00	36.00	18.25	658	864	864	1373
30"	418-66740	35.80	41.75	41.75	41.75	not offered		22.38	38.75	43.00	38.75	43.00	21.87	1067	1463	1463	2150
36"	607-97000	46.10	46.10	46.10	46.10			21.38	46.00	50.00	46.00	50.00	24.87	1529	2083	2083	3125
42"	831-132900	48.05	not offered	48.05	not offered			21.38	52.75	not offered	52.75	not offered	27.56	2113	2852	contact factory	
48"	1091-174440	50.00		50.00				21.38	59.50		59.50		30.56	2445	3139		

*Shipping weights are estimated and may change due to specific order packaging
** DIM D represents the remote transmitter height in relation to the meter centerline.

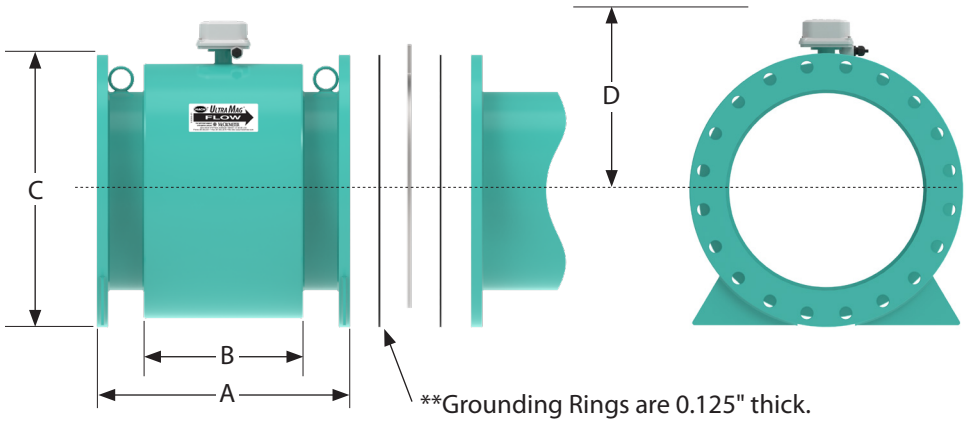

Ultra Mag 3000 Part Number Matrix

UM3		-									-		-		-		-		-	
Nominal Line Size																				
1.5"	0C																			
2"	02																			
2.5"	0D																			
3"	03																			
4"	04																			
6"	06																			
8"	08																			
10"	10																			
12"	12																			
14"	14																			
16"	16																			
18"	18																			
20"	20																			
24"	24																			
Flange Connections																				
AWWA Class D (150 psi Rating) *(Standard)*	1																			
ANSI Class 150# (285 psi Rating)	2																			
ANSI Class 300# (300 psi Rating)	3																			
AWWA Class F (300 psi Rating)	4																			
Wafer Style (2 & 3" Only)	N																			
Electrode Material Options																				
S316 Stainless Steel *(Standard)*	S																			
Hastelloy	H																			
Converter Mounting and Cable Connector Options																				
Meter Mount Converter	M																			
IP68 Strain Relief [Remote Mount] (Standard)	R																			
IP68 Quick Connect Potted Connector [Remote Mount]	Q																			
Converter Power Options																				
Battery Power *(Standard)*	B																			
Solar Power, Battery Backup	S																			
A/C Power, Battery Backup	E																			
DC Power, Battery Backup	F																			
Converter Output Options																				
No Outputs *(Standard)*																				
No Outputs, DC cable only	0																			
Two Digital Out	1																			
4-20mA Analog only	2																			
4-20mA Analog + Two Dig Out	3																			
DC Power/ Analog Out Cable Options																				
No DC Power or Outputs *(Standard)*																				
No Cable - Output Configured (Quick Conn)	0																			
6 ft (Open Leads)	1																			
25 ft (Open Leads)	2																			
50 ft (Open Leads)	3																			

Ultra Mag 3000 Part Number Matrix

UM3 -			-		-		-		-		-	
Pulse Cable Length Options												
No Outputs *(Standard)*												
No Cable - Output Configured (Quick Conn)	0											
6 ft (Open Leads)	1											
25 ft (Open Leads)	2											
50 ft (Open Leads)	3											
Output Cable Terminal Options												
Strain Relief		1										
Quick Connect Cable Terminals		2										
Smart Output Protocol / SmartTrax Options												
No AMI Outputs/SmartTrax Options												
Sensus Protocol (6ft cable, Nicor Connector hardwired only)				SEN								
Itron 6 digit Protocol (6ft cable, Nicor Connector hardwired only)				IT6								
Itron 9 digit [100W] Protocol (6ft cable, Nicor Connector hardwired only)				IT9								
Neptune Protocol (6ft cable, Nicor Connector hardwired only)				NEP								
2 ft SmartTrax Standalone Unit ExactRead Cable (Strain Relief Only)				S02								
6 ft SmartTrax Standalone Unit ExactRead Cable (Strain Relief Only)				S06								
25 ft SmartTrax Standalone Unit ExactRead Cable (Strain Relief Only)				S25								
50 ft SmartTrax Standalone Unit ExactRead Cable (Strain Relief Only)				S50								
Non Standard Length Options												
McCrometer Length *(Standard)*												
ISO Length (Only Available in ANSI)					ISO							
Competitor Replacement Length					LS	Select						
Competitor Replacement Length					LP	Length						
Custom Specified Length (Nominal Length)					L(XX)							
Color Options												
McCrometer Green (Standard)												
Sky Blue							SB					
Dark Blue							DB					
Lavender							LV					
White							WH					
No Batteries, Battery Tray Options												
Includes Batteries (Standard)												
No Batteries (Alkaline Tray)									NBA			
No Batteries (Lithium Tray)									NBL			
Canadian Registration Certified												
No CRN Needed												
CRN Certified (Sizes 4-12" ANSI Flanges Only)										CRN		
Hazardous Area Location												
No Hazardous Location Needed												
Class 1, Division 2, Groups A-D, T5												HL

Sensor Grounding and Electrical Interference

Grounding the meter body for safety according to national (NEC) or local electrical codes is recommended on ALL meter installations.

All Field Mag flow meter installations require minimum grounding with a 12-gauge ground wire to an earth ground.

Flanged end meters

When installing into a PVC or plastic pipe system, grounding rings for flanged meters are recommended for all sizes. Flanges on the Field Mag sensor have a non-conductive coating and may not require grounding rings. For best performance, McCrometer provides grounding rings for all sizes.

For best performance, grounding the fluid column is recommended when the meter is installed in an electrically noisy environment, such as with VFD pumps or nearby electrical systems with insufficient grounding.

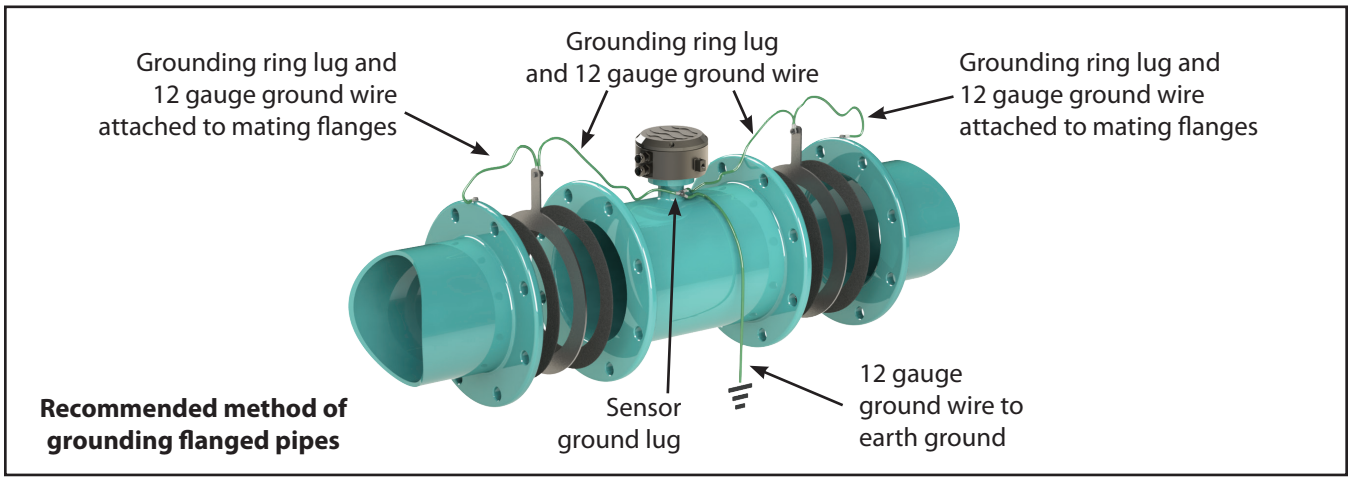

Recommended method of grounding flanged pipes

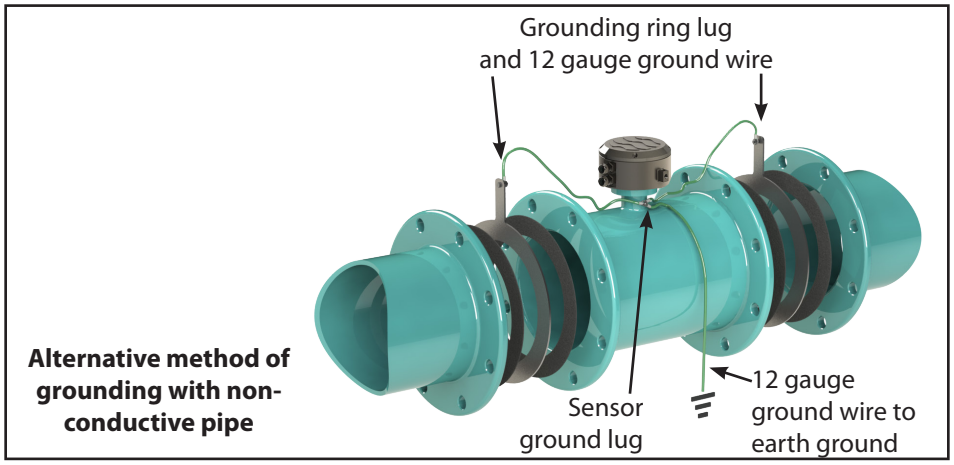

Alternative method of grounding with non-conductive pipe

ProComm Go Transmitter Specifications

Physical Specifications

Electronic Housing	Diecast aluminum, powder coated enclosure w/ tamper resistant seal, 6½" x 6½" x 43/8" tall
Transmitter Dimensions	See "Dimensions" section for meter mount and remote mount transmitter dimensions.
Power	**Battery:** Standard: three 3.6V lithium-thionyl chloride (Li-SOCI2) D size batteries with two AA backup batteries **AC Power:** 100-240VAC/45-66Hz (4W) **DC Power:** Linear power supply 10-35VDC (4 W)
Electrical Connections	• Optional shielded cable for 10-32VDC/4-20 mA output • Optional shielded cable for pulse out

Performance and Operational Specifications

Battery Life	Five-year expected battery life, five-year battery warranty
Location	Indoor or outdoor use
Altitude	Operating: 2000 meters Storage: 12,000 meters
Operating Temperature	-4° to 140° F (-20° to 60° C)
Storage Temperature	-4° to 140° F (-20° to 60° C)
Relative Humidity	0% to 100%
IP Rating	IP67 Die cast aluminum transmitter
Outputs	**Digital output:** Digital pulse (open collector) output for volumetric - Two isolated digital pulse (open collector) outputs for volumetric - AMI output **Analog output:** 4-20mA: Galvanically Isolated, 16 Bit resolution. All power configurations (including battery). Note: 9-30 VDC loop power required (not supplied via transmitter)

Display and Measurement

Display	• 2-Line LCD display (no backlight) • Non-volatile memory • Anti-reverse totalizer (standard) • Total (to 9 digits of precision)	• Flow rate and velocity (to 5 digits of precision) • Two alarms: low battery and empty pipe (optional) • Opening lid activates display
Digits	5 Rate, 9 Total	

Units

GPM	Gallons per minute	IGM	Imperial gal per minute	CFM	Cubic feet per minute
MGD	Mega gal per day	MI9	Miners inch (9G)	B5M	Barrels per minute (55G)
CFS	Cubic feet per second	MI1	Miners inch (11.22G)	B5H	Barrels per hour (55G)
MLD	Megaliters per day	APD	Acre feet per day	B5D	Barrels per day (55G)
LPS	Liters per second	KLH	Kiloliters per hour	B4M	Barrels per minute (42G)
CMH	Cubic meters per hour	LPH	Liters per hour	B4H	Barrels per hour (42G)
LPM	Liters per minute	CMM	Cubic meters per minute	B4D	Barrels per day (42G)
GPH	Gallons per hour	CFM	Cubic feet per minute		

ProComm Go Transmitter Specifications

Display and Measurement (cont.)

Totalizer Units	GAL	Gallons	B42	Barrel (42G)	MH1	Miners Inch Hour (11.22G)
	CUF	Cubic Feet	B46	Barrel (46G)	MD1	Miners Inch Day (11.22G)
	AFT	Acre Feet	B55	Barrel (55G)	MH9	Miners Inch Hour (9G)
	CUM	Cubic Meters	IMG	Imperial Gallon	MD9	Miners Inch Day (9G)
	LIT	Liters	AIN	Acre Inch	KGL	Kilo Gallons
	MML	Megaliter	TON	Ton (Short)	MGL	Mega Gallons
	MTT	Metric Ton (KL)	MM1	Miners Inch Minute (11.22G)	IN3	Cubic Inch
	B31	Barrel (31G)	MM9	Miners Inch Minute (9G)		
Data Logger	Standard with all models, minimum of five years of data stored					

Other Specifications

Options and Accessories	• Data Logger - included as standard with five years of data storage at default (12hr) interval. (Cable sold separately) • AC, DC, and battery powered with battery backup powered available
Safety	• IEC 61010-1, Pollution Degree II • Overvoltage protection Category III

Certifications

Standard Model	• ISO 9001:2015 certified quality management system • CE • Certified by MET to UL 61010-1

HL Model	• ISO 9001:2015 certified quality management system
	• CE
	• Certified by MET to UL 61010-1 and MET C22.2 No. 61010-1-04
	  • Class I, Division 2, Groups A B C D, T4
	  • Class I, Zone 2, IIC T4
	Note: ProComm GO with SmartTrax On Board is not available for hazardous locations.

ProComm Go Transmitter Dimensions

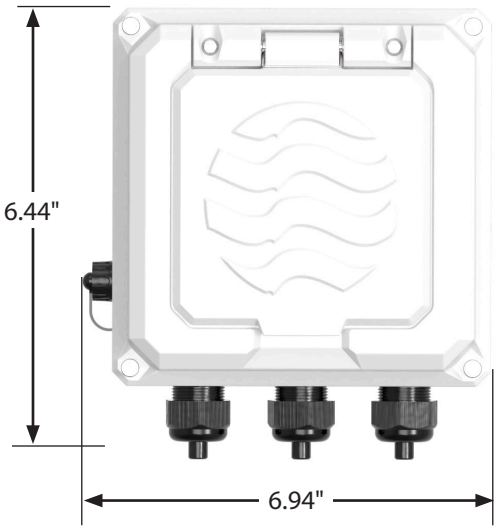

Meter mount converter

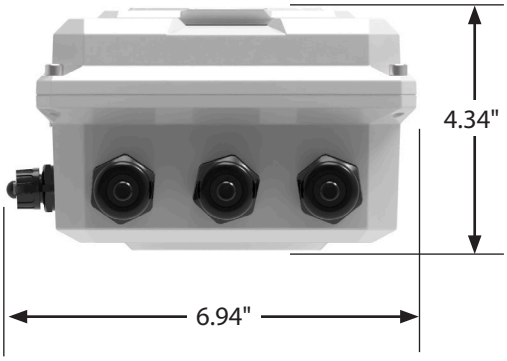

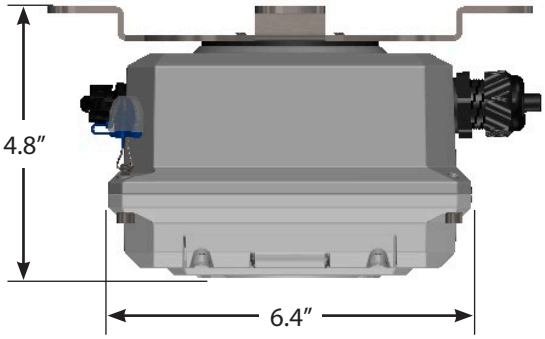

Remote mount converter

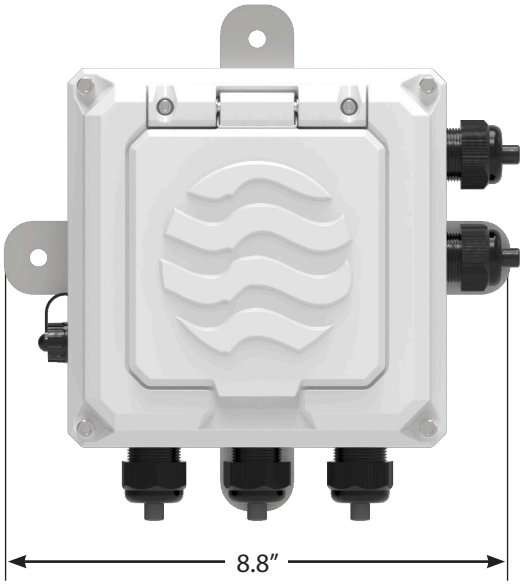

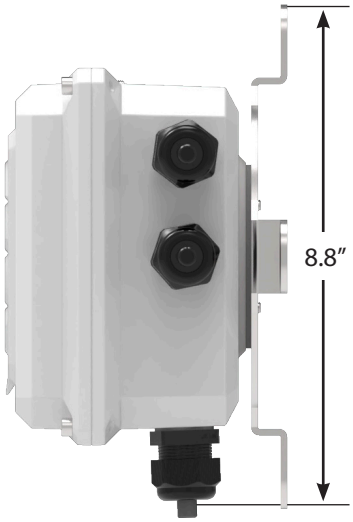

Transmitter Cable Connections from Sensor

Example Remote Mount Configuration

After installing the sensor, mount the transmitter and connect the cable to the meter's junction box and the transmitter's external connection. Figure 4 below shows an example of a remote mount installation with an optional Smart Output connection.

You will need to carefully plan the location where to install the remote transmitter. The location cannot be further from the flow meter than the length of the 25' cable. This must be planned in advance because the cable length cannot be altered as the cable is calibrated with the meter. Doing so will alter the calibration accuracy and void the warranty.

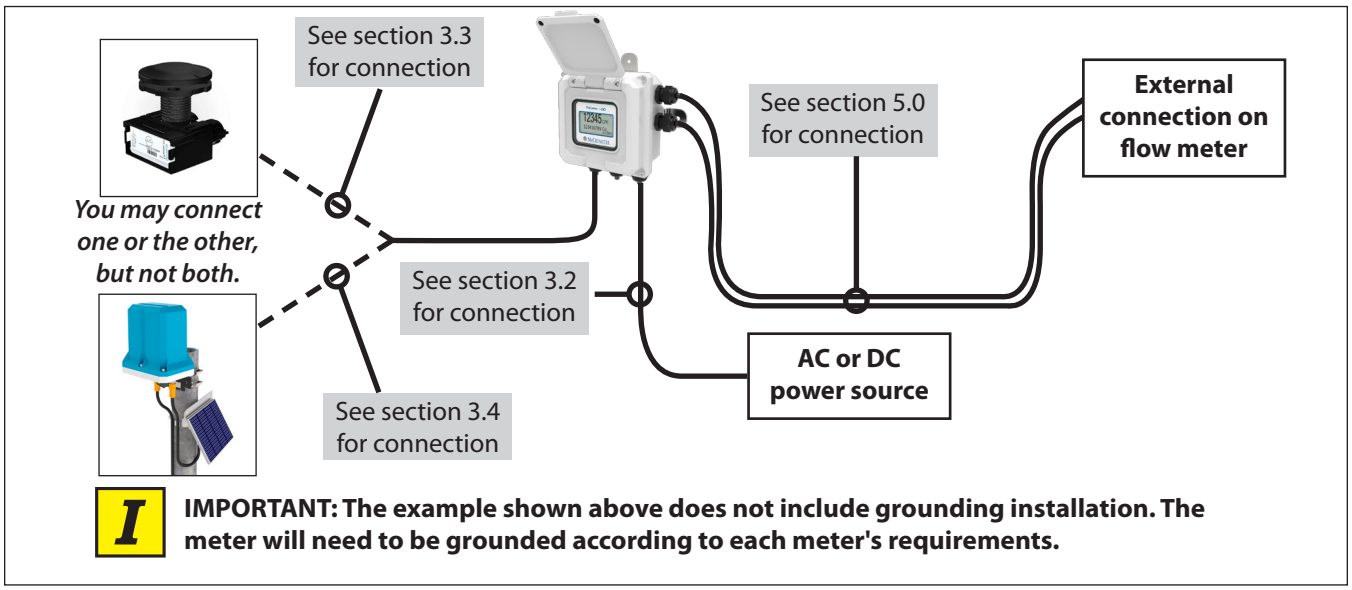

Transmitter Cable Connections from Sensor

Wiring Diagrams

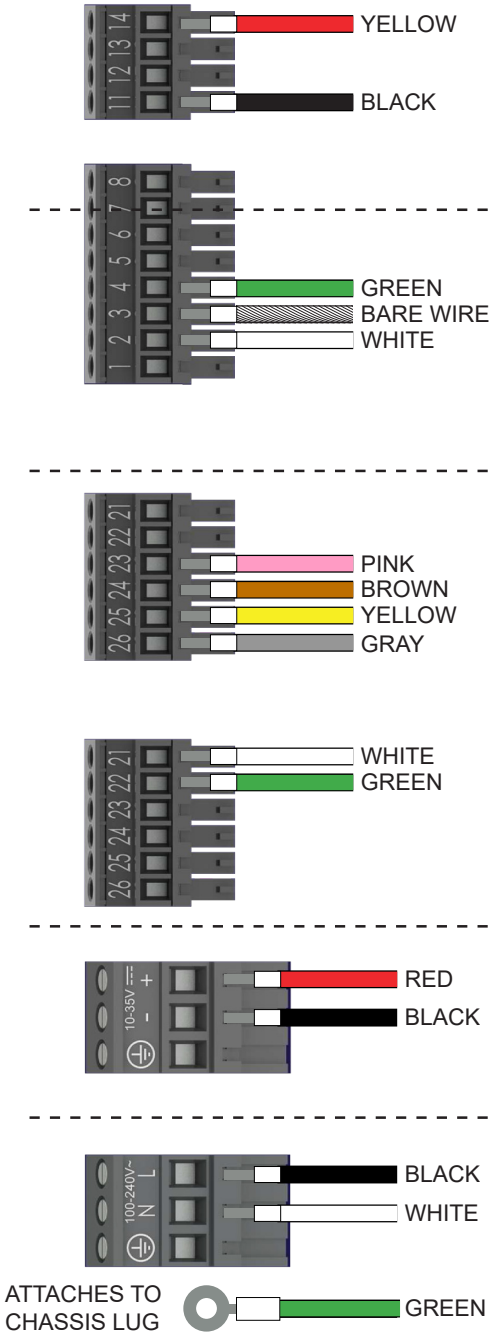

TERMINAL BLOCK ASSIGNMENTS

Coils Harness

Terminal	Port	Wire Color
11	4	Black
14	4	Red

Electrodes Harness

Terminal	Port	Wire Color
2	5	White
3	5	Bare wire
4	5	Green

Pulse Output Harness

Terminal	Port	Wire Color
23	1	Pink
24	1	Brown
25	1	Yellow
26	1	Gray

4-20 mA Output Harness

Terminal	Port	Wire Color
21	1	White
22	1	Green

DC Power Harness

Terminal	Port	Wire Color
Positive	3	Red
Negative	3	Black

AC Power Harness

Terminal	Port	Wire Color
Load	3	Black
Neutral	3	White
Chassis lug	3	Green

To complete AC power connection, connect green grounding lug to chassis as shown on previous page.

ProComm Go Battery Installation and Connection

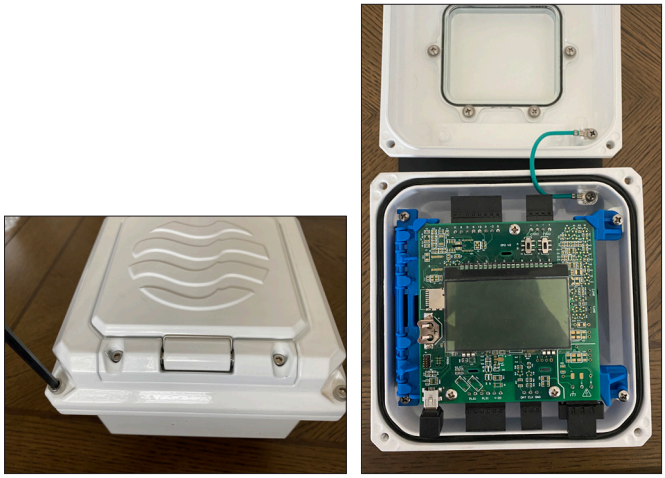

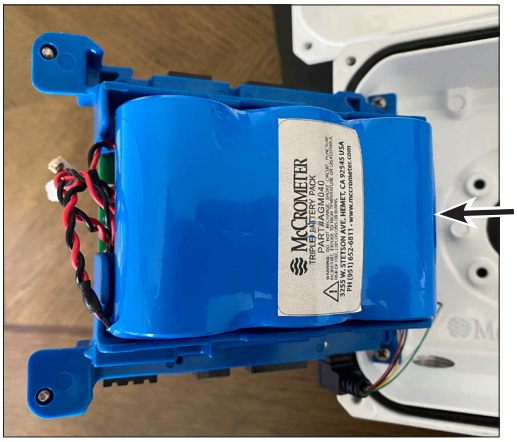

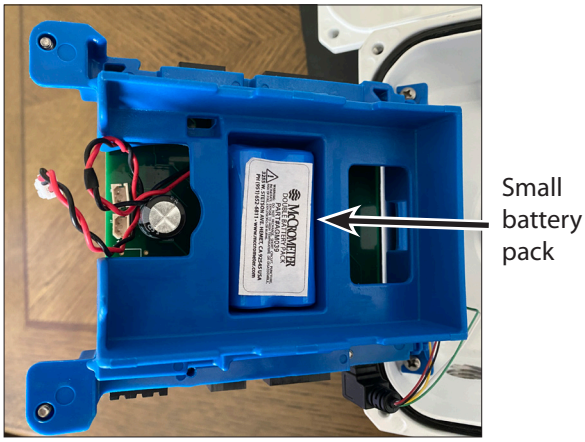

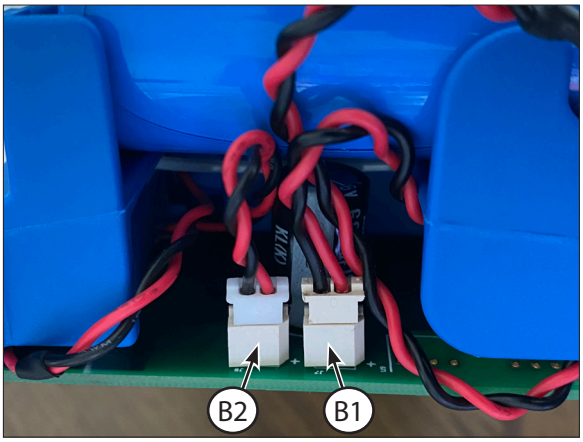

Ultra Mag 5000 Suggested Specifications

PART 1 - GENERAL

1.1 SCOPE

This section describes the requirements for an electromagnetic flow meter and microprocessor-based signal transmitter. Under this item, the contractor shall furnish and install the mag meter equipment and accessories as indicated on the plans and as herein specified.

1.1 SUBMITTALS

The following information shall be included in the submittal for this section:

1. Data sheets and catalog literature for the magmeter and the microprocessor-based signal transmitter.
2. Connection diagrams for equipment wiring.
3. List of spare parts and optional equipment.

PART 2 - PRODUCTS

2.1 ELECTROMAGNETIC FLOWMETER (MAG METER)

The electromagnetic flow meter shall consist of a flow sensor based on Faraday's Law of Electromagnetic Induction and microprocessor-based signal transmitter.

A. Sensor:

1. Operating principle: Utilizing Faraday's Law of Electromagnetic Induction, the flow of liquid through the sensor induces an electrical voltage that is proportional to the velocity of the flow.
2. Construction:
   a. The sensor flow tube shall be NEMA 6P or IP68 rated.
   b. Flow tube shall be constructed of 304 Stainless Steel.
   c. The liner material shall be Ultra Liner NSF approved fusion bonded epoxy. The liner shall carry a lifetime guarantee.
   d. Measurement and grounding electrodes shall be 316 Stainless Steel.
      1) Optional: Hastelloy C276 Electrodes shall be available for when corrosive fluids are present.
   e. Connecting flanges shall be AWWA 150# Or ANSI 150# (Optional 300# service shall be available) Flat Face Carbon Steel.
3. ANSI Flanges shall be available when required.
4. Two Stainless Steel grounding rings shall be supplied with each flow meter.
5. Installation:
   a. A minimum of 0 pipe diameters up stream and 0 pipe diameter downstream are recommended for sizes 1.5" – 3"
   b. A minimum of 1 pipe diameters up stream and 0 pipe diameters downstream are recommended for sizes 4" – 48"
6. Flow tube Operating Temp: +14 to +140° F.
7. Size: 1.5 " to 48" diameter (see instrument schedule)
8. Submergence: The sensor shall be capable of continual submergence at up to 6 ft. with standard strain relief cable or up to 30 ft. with optional quick connect cabling system.

Ultra Mag 5000 Suggested Specifications

B. Transmitter:

1. Electronic Enclosure: Shall be a NEMA 4X, IP67 rated enclosure.
2. Transmitter/display: Background illumination with alphanumeric 8-line graphical backlit LCD display with 6-key touch programming to indicate flow rate, totalized values, settings, and faults.
3. Power Supply: Power supplies must be modular and able to be changed in the field.
   a. 90-265 VAC
   b. 10-35 VDC
4. Operating temperature: -4 to +140 degrees F.
5. Outputs:
   a. Single, 4-20mA (active or passive)
   b. Two separate digital programmable outputs:
      1) Open collector transistor usable for pulse
      2) Frequency and alarm settings
6. Communications - Optional: Communications Protocols must be modular and able to be changed in the field.
   a. HART or secondary 4-20mA (active or passive)
   b. Modbus
   c. Ethernet IP
   d. AMI Smart Output (Sensus, Itron 6, Itron 9)
7. Transmitter Self Diagnostics – Data logger and Alarm information
8. Sensor and signal transmitter performance:
   a. Flow Range: .2 FPS to 32 FPS for accuracies stated below.
   b. Accuracy:
      1) AC or DC Power: Plus, or minus 0.2% or Plus, or minus 0.5% of actual flow.
   c. Cable Length: Remote Mount
      1) AC or DC Power: Up to 500'/152.4m
   d. Manufacturer shall offer optional Quick Connect cabling for remote mounted installations.
   e. Repeatability: ±0.05% or ±.0008ft/s (±0.25mm/s), whichever is greater
   f. Conductivity: Minimum 5 µs/cm
   g. Optional meter mounted transmitter.
   h. Bi-directional flow capabilities shall be standard.
   i. Power & Signal Cabling: The power and signal between the transmitter and sensor are isolated within single cable.
   j. Flow Direction Measurement: Forward and reverse flow indication and forward, reverse, net totalization is standard on all meters.
9. The electromagnetic flow meter shall be a Hach's Ultra Mag 5000 or approved equal.

2.2 SPARE PARTS

A. Spare parts for the equipment shall include the following, unless otherwise noted:

1. Extra operation manuals as required.

Ultra Mag 5000 Suggested Specifications

2.3 OPERATOR FUNCTIONS

A. Calibration

1. Each flow sensor shall have a 3 or 5- point wet flow calibration of the complete meter flow tube and its signal transmitter. The calibration facilities must be traceable to the National Institute of Standards and Technology (N.I.S.T). All the calibration information and factory settings matching the sensor shall be stored in an integrally mounted memory unit. The memory unit shall store sensor calibration data and signal transmitter settings for the lifetime of the product. At initial commissioning, the flow meter commences measurement without any initial programming. Any customer specified settings are downloaded to the memory unit. Should the signal transmitter need to be replaced, the new signal transmitter will upload all previous settings and resume measurement without any need for reprogramming or rewiring.
2. Manufacturer shall provide a calibrated meter set which includes the sensor tube, the cabling and the transmitter.
3. An N.I.S.T. certificate of calibration shall accompany each flow sensor.

PART 3 - EXECUTION

3.1 INSTALLATION

A. Follow manufacturer's recommendation for the minimum upstream and downstream installation requirements for the flow sensor.

B. Wiring between flow sensors and remote mounted signal transmitters shall use cable type and procedures as per the manufacturers' recommendations.

3.2 MANUFACTURER'S ASSISTANCE

A. Warranty

1. The manufacturer of the electromagnetic flow meter shall provide a two-year warranty that the equipment shall be free from defects in design, workmanship, or materials. Extended warranties up to five years shall be available for additional cost.
2. The manufacturer of the electromagnetic flow meter shall provide a Lifetime Guarantee on the flow tubes Ultra Liner fusion bonded epoxy liner.
3. In the event a component fails to perform as specified or is proven defective in service during the guarantee period, the manufacturer shall promptly repair or replace the defective part at no cost to the owner.

Ultra Mag 5000 Product Specifications

All specifications apply to both Ultra Mag 3000 and Ultra Mag 5000 models except where noted.

Physical Specifications

Measurement Method	Electromagnetic flow based on Faraday's Law
Directionality	Forward and reverse flow indication and forward, reverse, net totalization are standard with all meters
Pipe Sizes	Ultra Mag 3000: 1½, 2", 2½, 3", 4", 6", 8", 10", 12", 14", 16", 18", 20", 24" Ultra Mag 5000: 1½, 2", 2½, 3", 4" 6", 8", 10", 12", 14", 16", 18", 20", 24", 30", 36", 42", 48"
Body Style	Flanged tube
Liner	206N
Electrodes	Type 316 stainless steel, Hastelloy optional
Electrode Shape	Standard shape
Electrical Connections	• Compression gland seals • Quick-Connect
Signal Transmitter	• Ultra Mag 3000: ProComm GO transmitter • Ultra Mag 5000: ProComm Max transmitter
Transmitter Mount	Either meter mount or remote mount
Sensor Cable Lengths	• **Standard**: 25'/7.6 m McCrometer supplied submersible cable with each remote mount unit. • **Optional:** Up to 500'/152.4 m, or 25'/7.6 m max for ProComm GO • **Custom Quick Connect:** Available in standard cable lengths: Feet: 25, 50, 75, 100, 125, 150, 175, 200, 500 Meters: 7.6, 15.25. 22.5, 30.5, 38.1, 45.75, 53.3, 61, 152.4 Custom quick connect cables at additional cost.

Performance and Operational Specifications

Operating Temperature	-10 to 60 °C (14 to 140 °F)
Storage Temperature	-15 to 60 °C (5 to 140 ° F)
IP Rating	• Quick Connect (NEMA 6P/IP68 with remote transmitter) • Compression gland seals (NEMA 6P/IP68 with remote transmitter)
Sensor Submersibility Depth	**With standard strain relief cable:** 1.8 m (6 ft.) **With optional quick connect cable:** 9 m (30 ft.)
Pressure Rating	• AWWA CL D, 150 PSI maximum working pressure • ANSI #150, 285 PSI maximum • ANSI #300, 500 PSI maximum
Velocity Range	0.2 to 32 FPS

Ultra Mag 5000 Product Specifications

Performance and Operational Specifications (cont.)

Accuracy	• Ultra Mag 3000: Battery powered: 1% of measured value ±0.006 ft/s (±0.0018 m/s) • Ultra Mag 5000: Standard: +/- 0.5% of measured value ±0.006 ft/s (±0.0018 m/s) Optional: +/- 0.2% of measured value ±0.006 ft/s (±0.0018 m/s) **IMPORTANT NOTICE ON FLOW METER ACCURACY:** The Ultra Mag 3000 flow meter with remote display's cable and electronics are factory calibrated for accuracy as a single unit. Changing the cable length, even with the splice kit, changes the accuracy of the meter and invalidates the calibration certificate. The Ultra Mag 5000 flow meter does not have this restriction. Multiple point wet flow calibrations are conducted on every complete flow tube with its signal transmitter. If desired, the tests can be witnessed by the customer. The McCrometer test facilities are traceable to the National Institute of Standards & Technology. Uncertainty relative to flow is ±0.15%.
Repeatability	±0.05% or ±.0008ft/s (±0.25mm/s), whichever is greater
Head Loss	None. No obstruction in line and no moving parts
Conductivity	5 µs/cm
Pipe Run Requirements	**3000:** 1½" to 3" Flanged style meters — 0D upstream / 0D downstream 4" - 24" Steel flanged meters — 2D upstream / 1D downstream **5000:** 1½" to 3" Flanged style meters — 0D upstream / 0D downstream 4" - 48" Steel flanged meters — 1D upstream / 0D downstream

Other Specifications

Certifications and Approvals	**Ultra Mag 3000**
	
	Standard model:
	• ISO 9001:2015 certified quality management system
	• Certified by MET to UL 61010-1
	• Certified to NSF / ANSI Standards*
	
	HL Model:
	• ISO 9001:2015 certified quality management system
	• Certified by MET to UL 61010-1 and MET C22.2 No. 61010-1-04
	  • Class I, Division 2, Groups A B C D, T4
	  • Class I, Zone 2, IIC T4
	• Certified to NSF / ANSI Standards*
	
	Ultra Mag 5000
	• ISO 9001:2015 certified quality management system
	• Certified to NSF / ANSI Standards*

System Options	Stainless steel ID tag
Meter Options and Accessories	• Extended warranty • Hastelloy® electrodes • ANSI flanges • Special lay lengths, including ISO standard lay lengths • Additional sensor cable up to 475' • Quick connect cable fittings • Transmitter sun shield • Smart Output™ (Sensus or Itron compatible) • Battery or battery-solar powered transmitter (ProComm GO only)
Warranty	**Meter:** 2 year warranty **Liner:** Lifetime guarantee

* Certified by IAPMO R&T to NSF/ANSI 61 for material safety and NSF/ANSI 372 for low lead content.

Ultra Mag 5000 Flow Meter Dimensions

1½" to 3" Models

Pipe Size (Nominal)	Flow Ranges (0.2 to 32 FPS) Min-Max GPM	DIMENSIONS (Lay Lengths)							Est. Shipping Weight (lbs.)*	
		A		B	C		D			
		CL150 ANSI 150#	CL300 ANSI 300#		CL150 ANSI 150#	CL300 ANSI 300#	CL150 ANSI 150#	CL300 ANSI 300#	CL150 ANSI 150#	CL300 ANSI 300#
1 ½"	1.29-200	11	14	4.5	5.0	6.1	6.5	7.25	93	not offered
2"	1.29-200	11	14	4.5	6.0	6.5	6.5	7.25	93	70
2 ½"	3.25-510	13.4	15.5	4.5	7.0	7.5	7.0	7.75	94	not offered
3"	3.25-510	13.4	15.5	4.5	7.5	8.25	7.0	7.75	94	80

* For remote mount meters, add 4 lbs for ProComm Max transmitter.

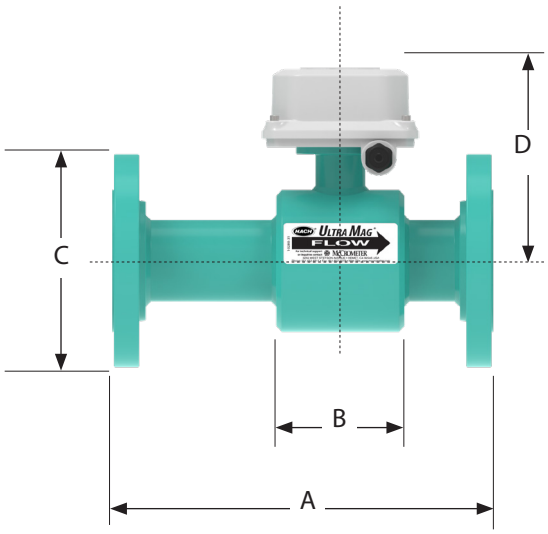

Ultra Mag 5000 Flow Meter Dimensions

4" to 12" Flanged End Body Style

Pipe Size (Nominal)	Flow Ranges (0.2 to 32 FPS) Min-Max GPM	DIMENSIONS (Lay Lengths)												Est. Shipping Weight (lbs.)*		
		A					B			C						
		AWWA	ANSI		ISO ANSI		AWWA	ANSI		AWWA	ANSI			AWWA	ANSI	
		150# Class D	150# CL150	300# CL300	150# CL150	300# CL300	150# Class D	150# CL150	300# CL300	150# Class D	150# CL150	300# CL300		150# Class D	150# CL150	300# CL300
4"	6.97-1110	13.4	13.4	13.4	9.00	10.00	9.0	9.0	10.0	9.25	9.25	9.25		86	167	167
6"	16.1-2560	14.6	14.6	14.6	11.00	12.50	11.0	11.0	12.5	10.25	10.25	10.25		98	186	186
8"	29.2-4670	16.1	17.25	17.25	13.50	15.00	13.5	13.5	15.0	11.25	11.25	11.25		118	250	250
10"	46.3-7400	18.5	18.5	18.5	16.00	17.50	16.0	16.0	17.5	12.5	12.5	12.5		168	290	290
12"	67.3-10760	19.7	19.7	19.7	19.00	20.50	19.0	19.0	20.5	13.5	13.5	13.5		210	350	350

*Shipping weights are estimated and may change due to specific order packaging

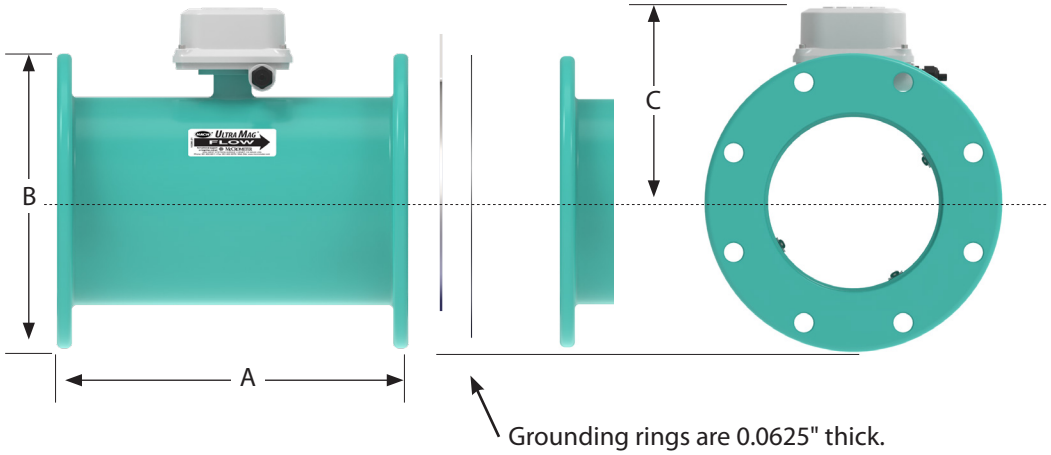

Ultra Mag 5000 Flow Meter Dimensions

14+" Flanged End Body Style

Pipe Size (nom.)	Flow Ranges (0.2 to 32 FPS) Min-Max GPM	DIMENSIONS												Est. Shipping Weight (lbs.)*			
		A						B	C				D**				
		AWWA		ANSI		ISO ANSI			AWWA		ANSI			AWWA		ANSI	
		150# Class D	300# Class F	150# CL150	300# CL300	150# CL150	300# CL300		150# Class D	300# Class F	150# CL150	300# CL300		150# Class D	300# Class F	150# CL150	300# CL300
14"	90.1-14410	21.70	22.75	22.75	22.75	21.00	23.00	10.38	21.00	23.00	21.00	23.00	13.56	290	370	370	550
16"	117-18670	23.60	25.25	25.25	25.25	23.50	25.50	12.38	23.50	25.50	23.50	25.50	14.31	352	443	443	639
18"	149-23820	23.60	25.25	25.25	25.25	25.00	28.00	12.38	25.00	28.00	25.00	28.00	15.31	400	492	492	801
20"	186-29600	25.60	28.25	28.25	28.25	27.50	30.50	14.38	27.50	30.50	27.50	30.50	16.25	465	603	603	973
24"	269-43040	30.70	35.75	35.75	35.75	32.00	36.00	18.88	32.00	36.00	32.00	36.00	18.25	658	864	864	1373
30"	418-66740	35.80	41.75	41.75	41.75	not offered		22.38	38.75	43.00	38.75	43.00	21.87	1067	1463	1463	2150
36"	607-97000	46.10	46.10	46.10	46.10			21.38	46.00	50.00	46.00	50.00	24.87	1529	2083	2083	3125
42"	831-132900	48.05	not offered	48.05	not offered			21.38	52.75	not offered	52.75	not offered	27.56	2113	2852	contact factory	
48"	1091-174440	50.00		50.00				21.38	59.50		59.50		30.56	2445	3139		

*Shipping weights are estimated and may change due to specific order packaging
** DIM D represents the remote transmitter height in relation to the meter centerline.

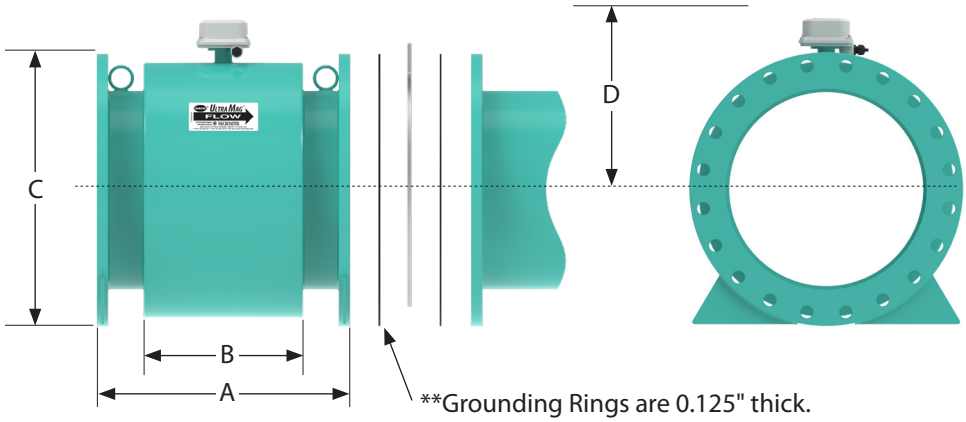

Ultra Mag 5000 Part Number Matrix

UM5	-								-		-		-		-		-		-
Nominal Line Size																			
1.5"	0C																		
2"	02																		
2.5"	0D																		
3"	03																		
4"	04																		
6"	06																		
8"	08																		
10"	10																		
12"	12																		
14"	14																		
16"	16																		
18"	18																		
20"	20																		
24"	24																		
30"	30																		
36"	36																		
42"	42																		
48"	48																		
End Connection Options																			
AWWA Class D (150 psi Rating) *(Standard)*		1																	
ANSI Class 150# (285 psi Rating)		2																	
ANSI Class 300# (300 psi Rating)		3																	
AWWA Class F (300 psi Rating)		4																	
Wafer Style (2 & 3" Only)		N																	
Electrode Material Options																			
S316 Stainless Steel *(Standard)*			S																
Hastelloy			H																
Transmitter Mounting and Cable Connector Options																			
Meter Mount Converter				M															
IP68 Strain Relief [Remote Mount] (Standard)				R															
IP68 Quick Connect Potted Connector [Remote Mount]				Q															
Remote Cable Length Options																			
Meter Mount Converter [No remote Cable]					000														
25 feet (Standard)					025														
50 feet					050														
75 feet					075														
100 feet					100														
125 feet					125														
150 feet					150														
175 feet					175														
200 feet					200														
500 feet					500														

Ultra Mag 5000 Part Number Matrix

UM5 -								-		-		-		-		-		-
Transmitter Power Options																		
A/C Power	A																	
DC Power	D																	
Transmitter Analog/Hart Output Options																		
Single 4-20mA Analog, Dual Digital (Standard)		1																
Dual 4-20mA Analog, Dual Digital		2																
1 Hart 4-20mA Analog, 1 Standard 4-20mA Analog, Dual Digital		3																
Transmitter Digital Output Options																		
No Digital Protocol Outputs																		
Modbus Protocol			MOD															
Ethernet IP Protocol *Future Option			EIP															
Output Protocol Types																		
No Digital outputs																		
RTU (RS485) Output (Modbus)				R														
TCP/IP Output (Modbus, Ethernet IP)				E														
Smart Output Protocol / SmartTrax Options																		
No AMI Outputs/ SmartTrax																		
Sensus Protocol (6ft cable, Nicor Connector hardwired only)									SEN									
Itron 6 digit Protocol (6ft cable, Nicor Connector hardwired only)									IT6									
Itron 9 digit [100W] Protocol (6ft cable, Nicor Connector hardwired only)									IT9									
Neptune Protocol (6ft cable, Nicor Connector hardwired only)									NEP									
2 ft SmartTrax Standalone Unit ExactRead Cable (Strain Relief Only)									S02									
6 ft SmartTrax Standalone Unit ExactRead Cable (Strain Relief Only)									S06									
25 ft SmartTrax Standalone Unit ExactRead Cable (Strain Relief Only)									S25									
50 ft SmartTrax Standalone Unit ExactRead Cable (Strain Relief Only)									S50									
Non Standard Length Options																		
McCrometer Length *(Standard)*																		
ISO Length (Only Available in ANSI)												ISO						
Competitor Replacement Length												LS	Select					
Competitor Replacement Length												LP	Length					
Custom Specified Length (Nominal Length)												L(XX)						
Accuracy Options																		
Please select Value																		
Standard Accuracy 0.5% Calibration																		
High Accuracy 0.2% Calibration														HA				
Color Options																		
McCrometer Green (Standard)																		
Sky Blue															SB			
Dark Blue															DB			
Lavender															LV			
White															WH			
Canadian Registration Certified																		
No CRN Needed																		
CRN Certified (Sizes 4-12" ANSI Flanges Only)																CRN		
Hazardous Area Location																		
No Hazardous Location Needed																		
Class 1, Division 2, Groups A-D, T5																		HL

Sensor Grounding and Electrical Interference

Meter Grounding Recommendations

Grounding the meter body for safety according to national (NEC) or local electrical codes is recommended on ALL meter installations.

All Field Mag flow meter installations require minimum grounding with a 12-gauge ground wire to an earth ground.

Flanged end meters

When installing into a PVC or plastic pipe system, grounding rings for flanged meters are recommended for all sizes. Flanges on the Field Mag sensor have a non-conductive coating and may not require grounding rings. For best performance, McCrometer provides grounding rings for all sizes.

For best performance, grounding the fluid column is recommended when the meter is installed in an electrically noisy environment, such as with VFD pumps or nearby electrical systems with insufficient grounding.

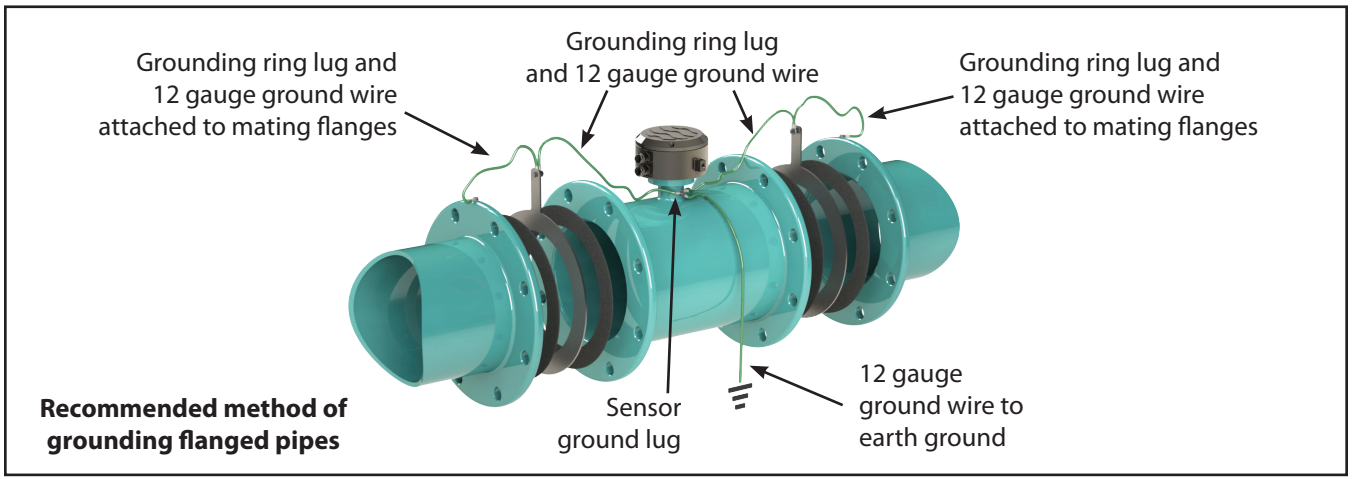

Recommended method of grounding flanged pipes

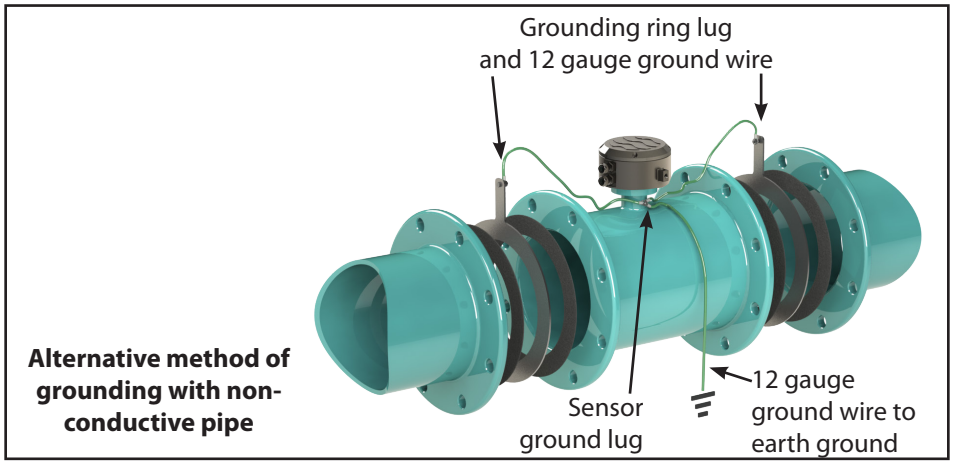

Alternative method of grounding with non-conductive pipe

ProComm Max Transmitter Specifications

Physical Specifications

Electronic Housing	Diecast aluminum, powder coated enclosure w/ tamper resistant seal
Transmitter Dimensions	Remote Mount: Height: 7.3" (18.5 cm) Width: 8.5" (21.6 cm) Depth: 4.3" (10.9 cm) Meter Mount: Height: 6.9" (17.5 cm) Width: 7.2" (18.25 cm) Depth: 6.2" (15.7 cm)
Power	AC Power: 100-240 VAC / 47-66 Hz (10 W) DC Power: 10-35 VDC (10 W) Note: AC or DC must be specified at time of ordering.
Connection Options	Conduit option: 1/2" NPT threaded connections
Galvanic Isolation	All outputs are galvanically isolated from power supply up to 500 V
Conductivity	Minimum conductivity of 5µS/cm

Performance and Operational Specifications

Location	Indoor or outdoor use
Operating and Storage Temperature	-4° to 140° F (-20° to 60° C)
IP Rating	IP67 Die cast aluminum transmitter
Standard Outputs	Single 4-20mA (standard). Galvanically isolated and fully programmable for zero and full scale. A second 4-20mA is available. Two separate digital programmable outputs: open collector transistor usable for pulse, frequency, or alarm settings. • Volumetric Pulse • Range Indication • Maximum switching voltage: 35 VDC • Maximum switching current: 100mA • Insulation from other secondary circuits: 500V
Optional Outputs	• Modbus • HART • Ethernet IP • Datalogger • Smart Output™ (Sensus, Itron 6, Itron 9)

Display and Measurement

Keyboard and Display	Can be used to access and change set-up parameters using six membrane keys and an LCD display
Units	GAL Gallons, CUF Cubic Feet, AFT Acre Feet, CUM Cubic Meters, LIT Liters, MML Megaliter, MTT Metric Ton (KL), B31 Barrel (31G), B42 Barrel (42G), B46 Barrel (46G), B55 Barrel (55G), IMG Imperial Gallon, AIN Acre Inch, TON Ton (Short), MM1 Miners Inch Minute (11.22G), MM9 Miners Inch Minute (9G), MH1 Miners Inch Hour (11.22G), MD1 Miners Inch Day (11.22G), MH9 Miners Inch Hour (9G), MD9 Miners Inch Day (9G), KGL Kilo Gallons, MGL Mega Gallons, IN3 Cubic Inch

Other Specifications

• ISO 9001:2015 certified quality management system • CE	

ProComm Max Transmitter Dimensions

Meter Mount Transmitter Dimensions

Height 6.9" (17.6 cm)
Width7.4" (18.8 cm)
Depth 5.6" (14.2 cm)

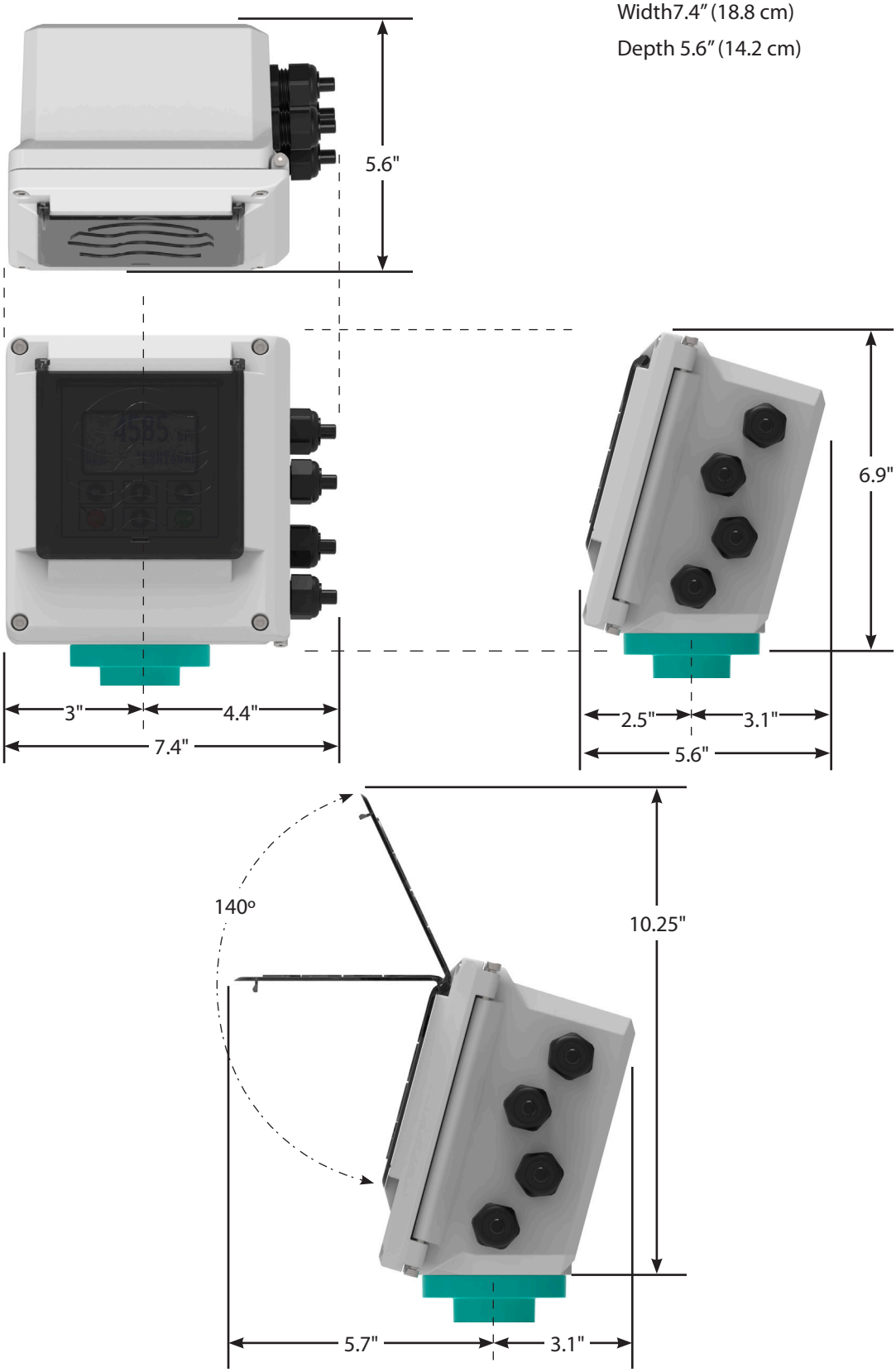

ProComm Max Transmitter Dimensions

Remote Mount Transmitter Dimensions

Height 7.4" (18.9 cm)
Width 8.5" (21.6 cm)
Depth 4.4" (11.2 cm)

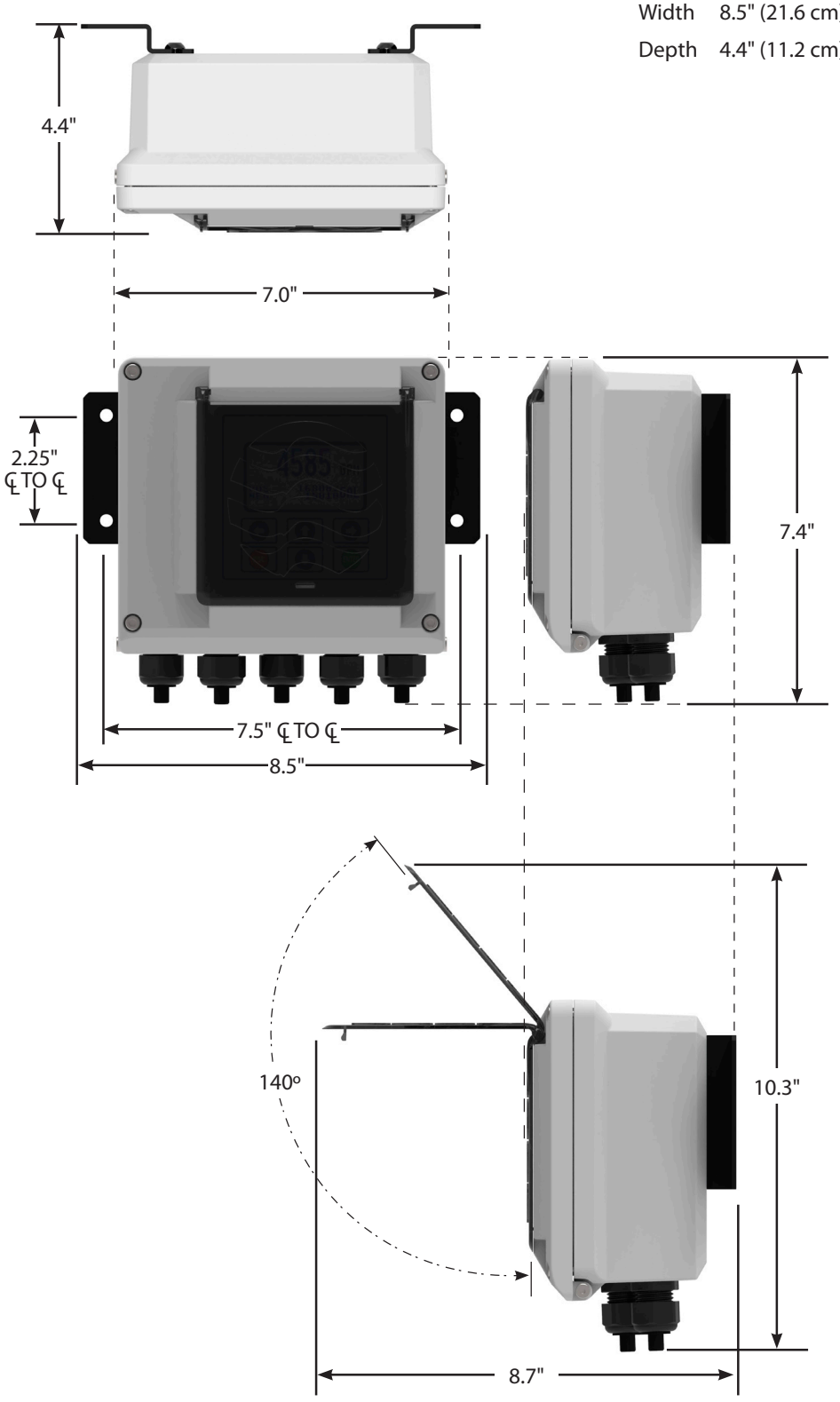

ProComm Max Transmitter Wiring Connection

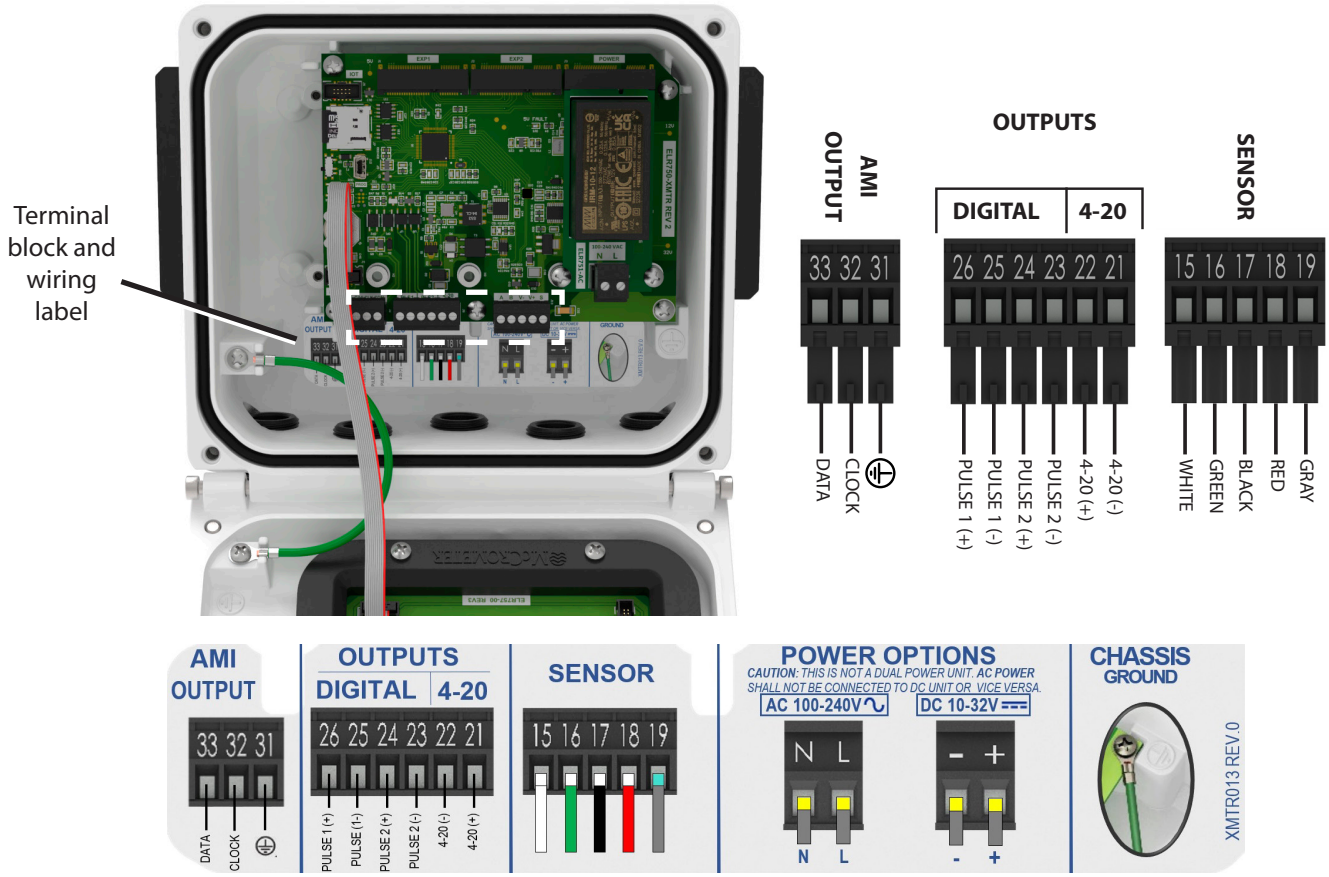

Terminal Block Assignments

Terminal	Cable	Wire Color
COILS		
11	COIL 1 (+)	
12	COIL 1 (-)	
13	COIL 2 (+)	
14	COIL 2 (-)	

Terminal	Cable	Wire Color
ELECTRODES		
1	SHIELD	
2	ELECTRODE (+)	
3	SHIELD	
4	ELECTRODE (-)	
5	SHIELD	
6	ELECTRODE REF	

Terminal	Cable	Wire Color
OUTPUTS		
26	PULSE 1 (+)	
25	PULSE 1 (-)	
24	PULSE 2 (+)	
23	PULSE 2 (-)	
22	4-20 (+)	
21	4-20 (-)	

Terminal	Cable	Wire Color
SENSOR		
15	A	White
16	B	Green
17	(-) DC	Black
18	(+) DC	Red
19	SHIELD	Gray/Bare

Terminal	Cable	Wire Color
AMI		
33	DATA	Varies. See section 3.8
32	CLOCK	
31	GROUND	

ProComm Max Expansion Cards

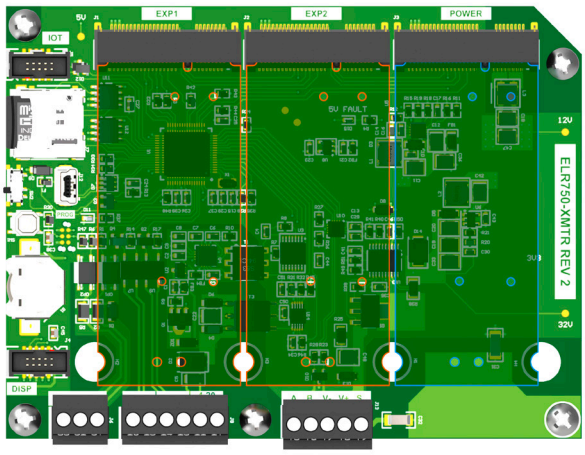

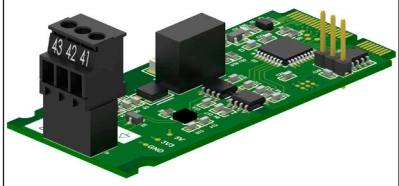

Modbus (RTU) expansion card

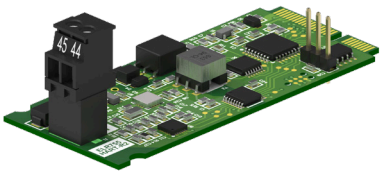

HART expansion card

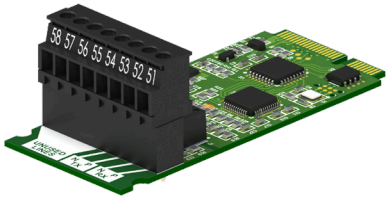

Ethernet expansion card

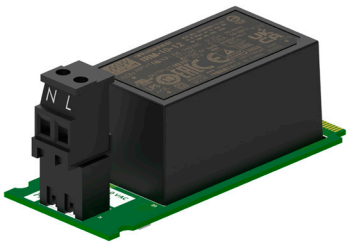

AC power card



DC power card

Inserting the expansion card

Refer to the images that accompany each step. The AC power card is shown as an example. See section 3.5 for wiring diagrams for both AC and DC power.

1. Slide the card into the connection slot. Set the card flat on the two support posts.

2. Insert and tighten two screws to secure the card in place.

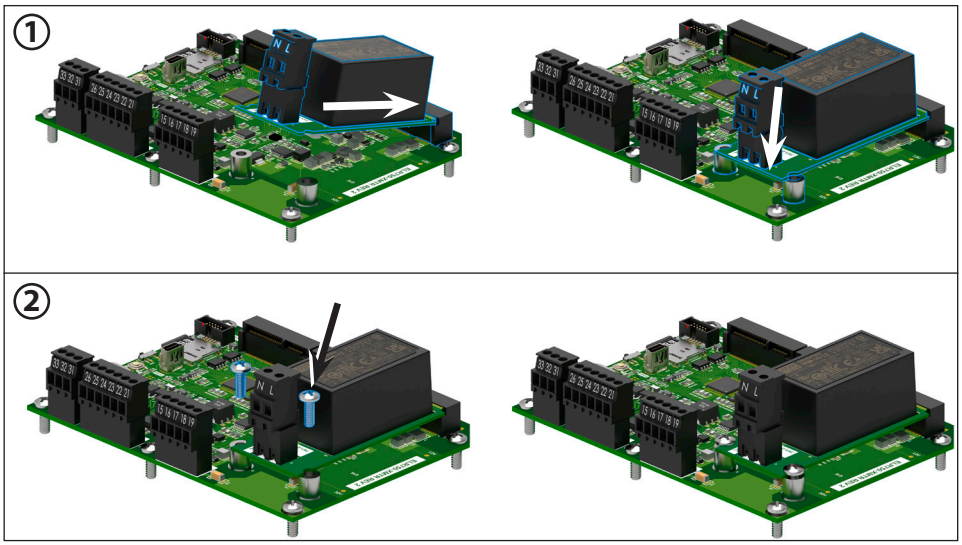

ProComm Max Transmitter Power Hook-Up

WARNING!
Hazardous supply voltage can shock, burn, or cause death.

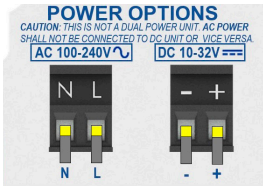

These instructions are for connecting either the AC or DC power option. The connections are shown below above the appropriate power card.

Install the power card as described in section 3.4. Connect power as shown below in Figure 14 and Figure 15.

The power supply line must be equipped with external surge protection for current overload (fuse or circuit breaker with limiting capacity not greater than 10A). It must be easily accessible for the operator and clearly identified.

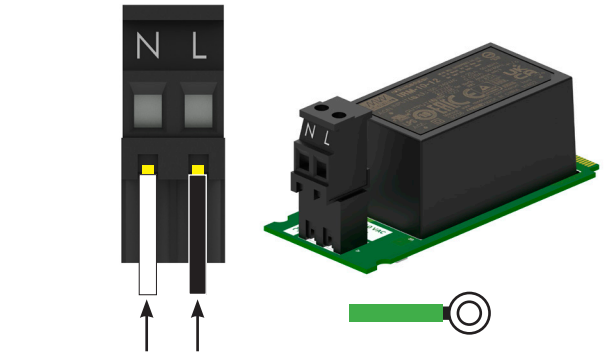

Neutral Wire (typically a white wire)
Line Wire (typically a black wire)
Ground Wire (typically a green wire)

Figure 14. AC Power Supply Terminal Block

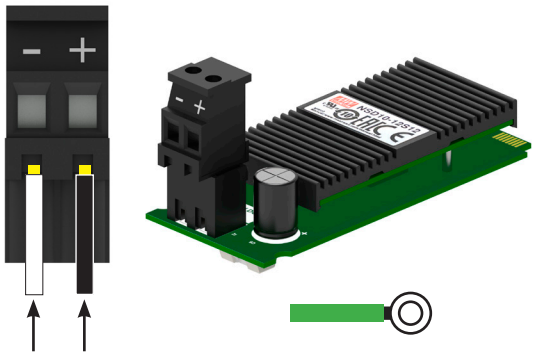

Power Supply (typically a white wire)
Power Supply + (typically a red wire)
Ground Wire (typically a green wire)

Figure 15. Optional DC Power Supply Terminal Block

Chassis Ground Connection

Location of Chassis Ground Lug

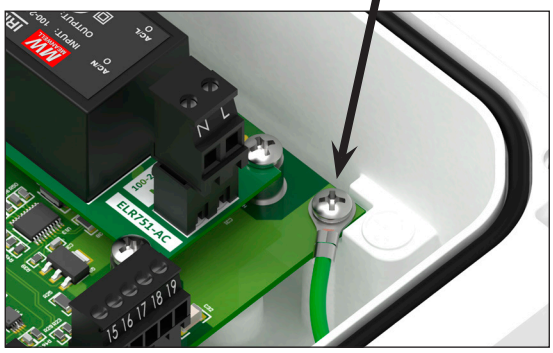

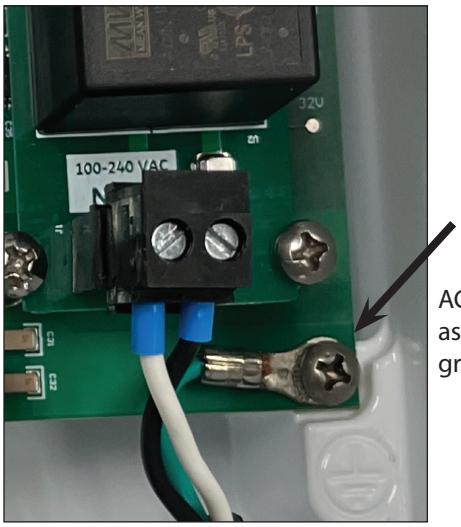

AC power card at left as an example of the ground connection.

4-20mA Hook-Up

Output type: 4-20mA current loop, sink powered (passive)

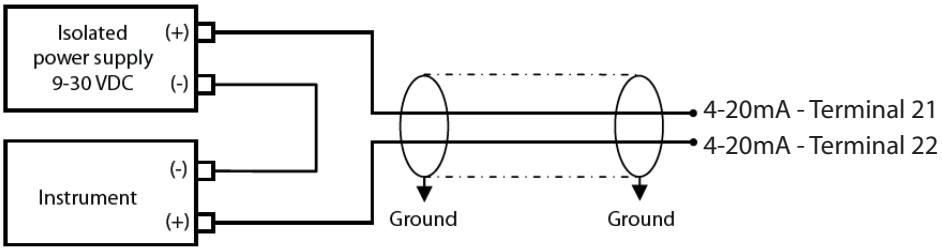

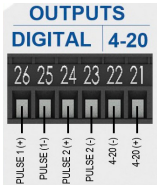

Output type: 4-20mA current loop, source powered (active)

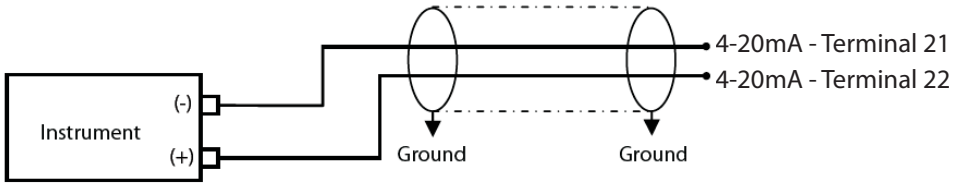

If the external device requires a voltage input, a precision resistor placed across the input terminals of the external device will change the current to voltage. Calculate the required resistor using Ohm's law (V = I x R). For example, a 250Ω resistor will provide an input voltage of one to five volts with the transmitter range being set from 4mA to 20mA. An additional 4-20mA loop output is available.

Meter source power is 12V for loop power. Max resistance with source power is 300 ohms. Sink power supplied for loop from external device range is 12 – 30 V DC. Max resistance with external sink power is Rmax = 50 * (V in – 5)

IMPORTANT
The 4-20mA output can be sink or source powered which is selectable in the menus. Default setting is source powered to avoid damage to the circuit. Do not select source powered if the 4-20 loop has sink power from the 4-20 instrument.

3.7 Opto-Isolated Pulse Output Hook-Up

The outputs are open collector solid state relay outputs used to communicate with or activate external devices.

- Opto-isolated solid state relay open collector
- Maximum switching voltage: 80 VDC
- Maximum switching current: 8 ohms
- Isolation from other secondary circuits: 500 V
- Pulse width range 5ms – 1 second



McCrometer, Inc.
3255 West Stetson Avenue
Hemet, CA 92545 USA
Tel: 951-652-6811
800-220-2279
Fax: 951-652-3078
customerservice@mccrometer.com
www.mccrometer.com

USA Copyright © McCrometer, Inc. All printed material should not be changed or altered without permission of McCrometer. Any published pricing, technical data, and instructions are subject to change without notice. Contact your McCrometer representative for current pricing, technical data, and instructions.