HACH ULTRA MAG™

Ultra Mag Flow Meter Specification Sheet

Ultra Mag 3000 utilizes the ProComm Go electronics which allows AC or DC power with battery backup or straight battery operation with pulse and 4-20mA outputs with an accuracy of +/- 1.0% of reading.

Ultra Mag 5000 utilizes the ProComm Max electronics which allows AC or DC power with Modbus, pulse and 4-20mA outputs with an accuracy of +/- 0.5% of reading.

Applications

Ultra Mag flow meters are intended to be used both in clean drinking water and waste water applications. These can include:

- Raw/well source water
- Distribution/ networks
- Water storage
- Revenue/billing
- Pumping stations
- Water treatment
- Final water discharge
- Storm water
- Waste water pumping stations
- Effluent final discharge

Performance Advantages

- Flanged models need only 1 pipe diameter upstream of most flow disturbers
- No obstruction to the flow
- No moving parts to wear or break
- Maintenance free
- Choice of Accuracy +/- 0.2% OR +/- 0.5%
- Debris or solids will not clog the meter
- No head loss
- Bi-directional flow
- Empty pipe detection
- Unaffected by changes in density and viscosity
- No risk of liner delamination or separation
- Wide flow range
- Separated power and signal cables



Standard and Hazardous Location Models

Ultra Mag is designed to work in ordinary circumstances and in hazardous locations. It is available as either the standard model or as a hazard location (HL) model, which is certified by MET (Ultra Mag 3000 only).

Available Ultra Mag End Connections

Nominal Line Size	AWWA CL D	AWWA CL F	ANSI 150#	ANSI 300#
1.5 in			x	x
2 in			x	x
2.5 in			x	x
3 in			x	x
4 in	x		x	x
6 in	x		x	x
8 in	x		x	x
10 in	x		x	x
12 in	x		x	x
14in	x	x	x	x
16 in	x	x	x	x
18 in	x	x	x	x
20 in	x	x	x	x
24 in	x	x	x	x
30 in	x	x	x	x
36 in	x	x	x	x
42 in	x		x	
48 in	x		x	

Certifications

Ultra Mag series currently has three certifications for quality and safety:

- ISO 9001:2015 certified quality management system
- Certified to NSF / ANSI Standards
- Certified by IAPMO R&T to NSF/ANSI 61 for material safety and NSF/ANSI 372 for low lead content

Additionally, Ultra Mag 3000 is certified for hazardous location:

- Certified by MET to UL 61010-1 / CSA C22.2 No. 61010-1
  - Class I, Division 2, Groups A-D, T4
  - Class I, Zone 2, IIC T4



Hach's Flow Solutions by McCROMETER

Quality Manufacturing

Ultra Mag flow meters are manufactured to the highest standard available for mag meters. The flanged end tube design permits use in a wide range of applications with up to 500 PSI working pressure. The fabricated tube is stainless steel with steel or stainless steel flanges and is lined with UltraLiner™, an NSF approved, fusion bonded epoxy material.

Signal Transmitters / Transmitters

The signal transmitter is always located at the sensor and changes the raw flow data into usable flow information to allow the measurements, functional programming, and data reporting to be communicated through the transmitters display and outputs. There are two different transmitter models used in various applications. Both transmitters are available as either meter mount or remote mount.

• ProComm GO Transmitter

Ultra Mag 3000 flow meter is accompanied by the ProComm GO electronics and is battery powered, ideal for remote installations and locations with unreliable power sources.

- Output options include pulse, 4-20mA, and telemetry
- Battery powered with optional AC/DC with battery backup
- Offering ±1% accuracy
- DIY battery replacement and in-field transmitter programming available via USB cable and laptop
- CRN (ANSI), CE, UL certifications

• ProComm Max Transmitter

Ultra Mag 5000 is offered with the ProComm Max electronics, offering greater accuracy and more sophisticated output options for users needing superior system integration and data collection.

- Output options include Hart, ModBus, 4-20mA
- Datalogger and optional AMI/AMR
- Optional Class 1 Div 2
- AC/DC powered
- ±0.5% standard accuracy, ±0.2% optional
- Bi-directional flow available
- CRN (ANSI), CE, UL, CSA certifications

Installation

Ultra Mag flow meter installation is similar to placing a short length of flanged end pipe in the line. The meter can be installed vertically, horizontally, or inclined on suction or discharge lines. The meter must have a full pipe of liquid for proper operation. Fluid must be grounded to the downstream flange of the sensor using McCrometer 316 SS grounding rings. For best performance, grounding rings are recommended for all sizes.

The meter needs to be located a minimum distance before and after flow disturbances, such as elbows, pumps, partially opened valves, and changes in pipe diameter. The uneven flow created by these obstructions can vary with each system.

The minimum distance is measured in pipe diameters (D). To ensure accuracy locate the sensor upstream and downstream of flow disturbances as follows:

1½" to 3" Flanged style meters 0D upstream / 0D downstream

4" - 48" Steel flanged meters 1D upstream / 0D downstream

All blending and chemical injection should be done early enough so the flow media is thoroughly mixed prior to entering the measurement area.

Meter Grounding Recommendations

Grounding the meter body for safety according to national (NEC) or local electrical codes is recommended on ALL meter installations.

All Field Mag flow meter installations require minimum grounding with a 12-gauge ground wire to an earth ground.

Flanged end meters

When installing into a PVC or plastic pipe system, grounding rings for flanged meters are recommended for all sizes. Flanges on the Field Mag sensor have a non-conductive coating and may not require grounding rings. For best performance, McCrometer provides grounding rings for all sizes.

For best performance, grounding the fluid column is recommended when the meter is installed in an electrically noisy environment, such as with VFD pumps or nearby electrical systems with insufficient grounding.

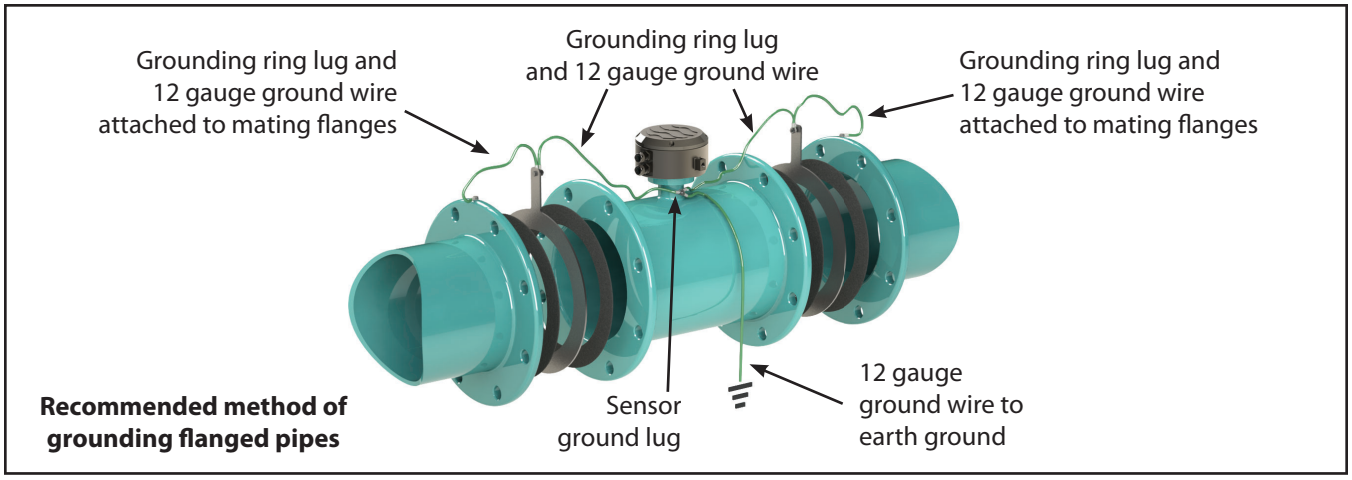

Recommended method of grounding flanged pipes

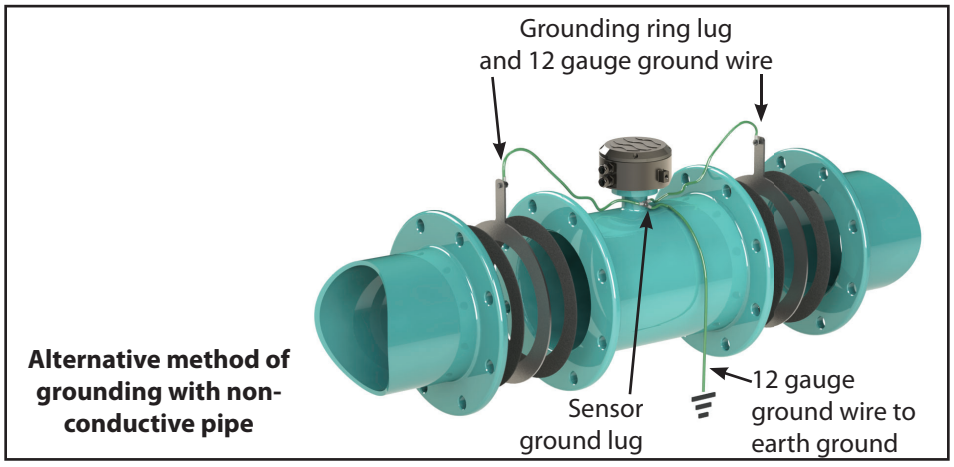

Alternative method of grounding with non-conductive pipe

Ultra Mag Flow Meter Specifications

All specifications apply to both Ultra Mag 3000 and Ultra Mag 5000 models except where noted.

Physical Specifications

Measurement Method	Electromagnetic flow based on Faraday's Law
Directionality	Forward and reverse flow indication and forward, reverse, net totalization are standard with all meters
Pipe Sizes	Ultra Mag 3000: 1½, 2", 2½, 3", 4", 6", 8", 10", 12", 14", 16", 18", 20", 24" Ultra Mag 5000: 1½, 2", 2½, 3", 4" 6", 8", 10", 12", 14", 16", 18", 20", 24", 30", 36", 42", 48"
Body Style	Flanged tube
Liner	206N
Electrodes	Type 316 stainless steel, Hastelloy optional
Electrode Shape	Standard shape
Electrical Connections	• Compression gland seals • Quick-Connect
Signal Transmitter	• Ultra Mag 3000: ProComm GO transmitter • Ultra Mag 5000: ProComm Max transmitter
Transmitter Mount	Either meter mount or remote mount
Sensor Cable Lengths	• **Standard**: 25'/7.6 m McCrometer supplied submersible cable with each remote mount unit. • **Optional:** Up to 500'/152.4 m, or 25'/7.6 m max for ProComm GO • **Custom Quick Connect:** Available in standard cable lengths: Feet: 25, 50, 75, 100, 125, 150, 175, 200, 500 Meters: 7.6, 15.25. 22.5, 30.5, 38.1, 45.75, 53.3, 61, 152.4 Custom quick connect cables at additional cost.

Performance and Operational Specifications

Operating Temperature	-10 to 60 °C (14 to 140 °F)
Storage Temperature	-15 to 60 °C (5 to 140 ° F)
IP Rating	• Quick Connect (NEMA 6P/IP68 with remote transmitter) • Compression gland seals (NEMA 6P/IP68 with remote transmitter)
Sensor Submersibility Depth	**With standard strain relief cable:** 1.8 m (6 ft.) **With optional quick connect cable:** 9 m (30 ft.)
Pressure Rating	• AWWA CL D, 150 PSI maximum working pressure • ANSI #150, 285 PSI maximum • ANSI #300, 500 PSI maximum
Velocity Range	0.2 to 32 FPS

Ultra Mag Flow Meter Specifications (cont.)

Performance and Operational Specifications (cont.)

Accuracy	• Ultra Mag 3000: Battery powered: 1% of measured value ±0.006 ft/s (±0.0018 m/s) • Ultra Mag 5000: Standard: +/- 0.5% of measured value ±0.006 ft/s (±0.0018 m/s) Optional: +/- 0.2% of measured value ±0.006 ft/s (±0.0018 m/s) **IMPORTANT NOTICE ON FLOW METER ACCURACY:** The Ultra Mag 3000 flow meter with remote display's cable and electronics are factory calibrated for accuracy as a single unit. Changing the cable length, even with the splice kit, changes the accuracy of the meter and invalidates the calibration certificate. The Ultra Mag 5000 flow meter does not have this restriction. Multiple point wet flow calibrations are conducted on every complete flow tube with its signal transmitter. If desired, the tests can be witnessed by the customer. The McCrometer test facilities are traceable to the National Institute of Standards & Technology. Uncertainty relative to flow is ±0.15%.
Repeatability	±0.05% or ±.0008ft/s (±0.25mm/s), whichever is greater
Head Loss	None. No obstruction in line and no moving parts
Conductivity	5 µs/cm
Pipe Run Requirements	**3000:** 1½" to 3" Flanged style meters — 0D upstream / 0D downstream 4" - 24" Steel flanged meters — 2D upstream / 1D downstream **5000:** 1½" to 3" Flanged style meters — 0D upstream / 0D downstream 4" - 48" Steel flanged meters — 1D upstream / 0D downstream

Other Specifications

Certifications and Approvals	**Ultra Mag 3000**
	Standard model:
	• ISO 9001:2015 certified quality management system
	• Certified by MET to UL 61010-1
	• Certified to NSF / ANSI Standards*
	HL Model:
	• ISO 9001:2015 certified quality management system
	• Certified by MET to UL 61010-1 and MET C22.2 No. 61010-1-04
	  • Class I, Division 2, Groups A B C D, T4
	  • Class I, Zone 2, IIC T4
	• Certified to NSF / ANSI Standards*
	
	Ultra Mag 5000
	• ISO 9001:2015 certified quality management system
	• Certified to NSF / ANSI Standards*
	• Certified by MET to UL 61010-1 and MET C22.2 No. 61010-1-04
	  • Class I, Division 2, Groups A B C D, T4

System Options	Stainless steel ID tag
Meter Options and Accessories	• Extended warranty • Hastelloy® electrodes • ANSI flanges • Special lay lengths, including ISO standard lay lengths • Additional sensor cable up to 475' • Quick connect cable fittings • Transmitter sun shield • Smart Output™ (Sensus or Itron compatible) • Battery or battery-solar powered transmitter (ProComm GO only)
Warranty	**Meter:** 2 year warranty **Liner:** Lifetime guarantee

* Certified by IAPMO R&T to NSF/ANSI 61 for material safety and NSF/ANSI 372 for low lead content.

Flow Meter Dimensions and Weights

1½" to 3" Models

Pipe Size (Nominal)	Flow Ranges (0.2 to 32 FPS) Min-Max GPM	DIMENSIONS (Lay Lengths)							Est. Shipping Weight (lbs.)*	
		A		B	C		D			
		CL150 ANSI 150#	CL300 ANSI 300#		CL150 ANSI 150#	CL300 ANSI 300#	CL150 ANSI 150#	CL300 ANSI 300#	CL150 ANSI 150#	CL300 ANSI 300#
1 ½"	1.29-200	11	14	4.5	5.0	6.1	6.5	7.25	93	not offered
2"	1.29-200	11	14	4.5	6.0	6.5	6.5	7.25	93	70
2 ½"	3.25-510	13.4	15.5	4.5	7.0	7.5	7.0	7.75	94	not offered
3"	3.25-510	13.4	15.5	4.5	7.5	8.25	7.0	7.75	94	80

* For remote mount meters, add 4 lbs for ProComm Max transmitter.

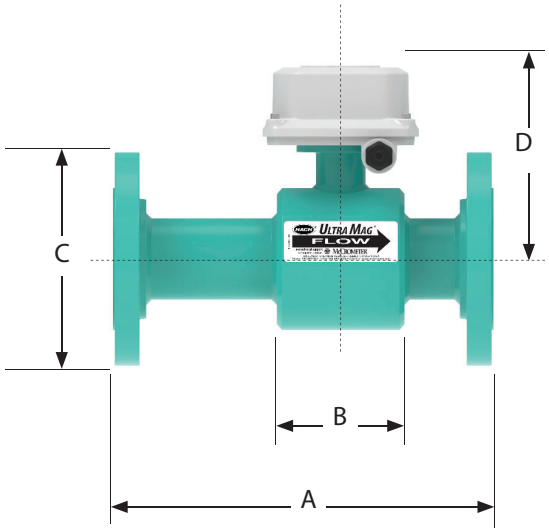

2" and 3" Models Body Style

Meter Type	Pipe Size (Nominal)	Meter Pipe ID	Flow Ranges GPM Standard .2 to 32 FPS Min - Max	DIMENSIONS (Lay Lengths)							Est. Shipping Weight (lbs.)**	
				A*		B	C		D	E		
				UM06	UM08		UM06	UM08			UM06	UM08
Use model shown below for dimensions												
Wafer style	2"	1.625	2 - 310	4.5	4.5	4.0	6.5	7.25	n/a	n/a	9.6	10.1
	3"	2.625	5 - 700	4.5	4.5	4.0	7.0	7.75	n/a	n/a	11.3	11.8

* Laying lengths for meters with ANSI Class 150 Flanges are equal to UM08 laying lengths

** For remote mount meters, add 4 lbs for ProComm converter.

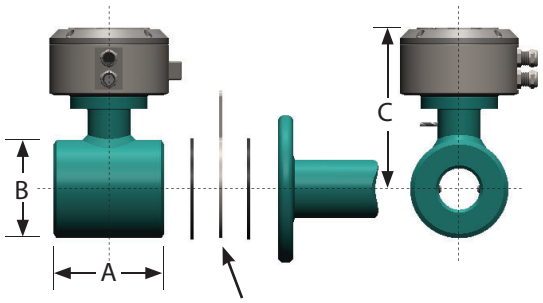

Grounding rings are 0.0625" thick.

Dimensions and Weights (cont.)

4" to 12" Flanged End Body Style

Pipe Size (Nominal)	Flow Ranges (0.2 to 32 FPS) Min-Max GPM	DIMENSIONS (Lay Lengths)											Est. Shipping Weight (lbs.)*		
		A					B			C					
		AWWA	ANSI		ISO ANSI		AWWA	ANSI		AWWA	ANSI		AWWA	ANSI	
		150# Class D	150# CL150	300# CL300	150# CL150	300# CL300	150# Class D	150# CL150	300# CL300	150# Class D	150# CL150	300# CL300	150# Class D	150# CL150	300# CL300
4"	6.97-1110	13.4	13.4	13.4	9.00	10.00	9.0	9.0	10.0	9.25	9.25	9.25	86	167	167
6"	16.1-2560	14.6	14.6	14.6	11.00	12.50	11.0	11.0	12.5	10.25	10.25	10.25	98	186	186
8”	29.2-4670	16.1	17.25	17.25	13.50	15.00	13.5	13.5	15.0	11.25	11.25	11.25	118	250	250
10”	46.3-7400	18.5	18.5	18.5	16.00	17.50	16.0	16.0	17.5	12.5	12.5	12.5	168	290	290
12”	67.3-10760	19.7	19.7	19.7	19.00	20.50	19.0	19.0	20.5	13.5	13.5	13.5	210	350	350

*Shipping weights are estimated and may change due to specific order packaging

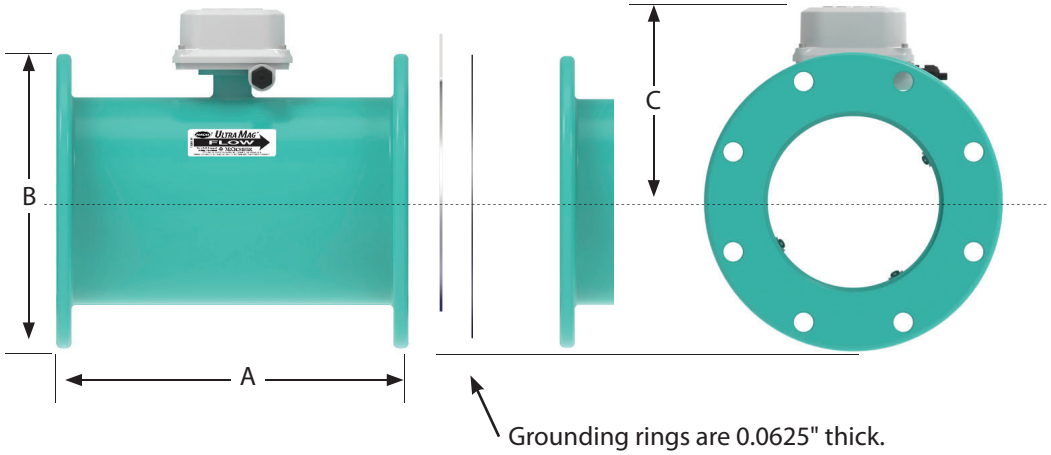

Dimensions and Weights (cont.)

14+" Flanged End Body Style

Pipe Size (nom.)	Flow Ranges (0.2 to 32 FPS) Min-Max GPM	DIMENSIONS												Est. Shipping Weight (lbs.)*			
		A						B	C				D**				
		AWWA		ANSI		ISO ANSI			AWWA		ANSI			AWWA		ANSI	
		150# Class D	300# Class F	150# CL150	300# CL300	150# CL150	300# CL300		150# Class D	300# Class F	150# CL150	300# CL300		150# Class D	300# Class F	150# CL150	300# CL300
14"	90.1-14410	21.70	22.75	22.75	22.75	21.65	21.65	10.38	21.00	23.00	21.00	23.00	13.56	290	370	370	550
16"	117-18670	23.60	25.25	25.25	25.25	23.62	23.62	12.38	23.50	25.50	23.50	25.50	14.31	352	443	443	639
18"	149-23820	23.60	25.25	25.25	25.25	23.00	23.00	12.38	25.00	28.00	25.00	28.00	15.31	400	492	492	801
20"	186-29600	25.60	28.25	28.25	28.25	25.59	25.59	14.38	27.50	30.50	27.50	30.50	16.25	465	603	603	973
24"	269-43040	30.70	35.75	35.75	35.75	30.70	30.70	18.88	32.00	36.00	32.00	36.00	18.25	658	864	864	1373
30"	418-66740	35.80	41.75	41.75	41.75	not offered		22.38	38.75	43.00	38.75	43.00	21.87	1067	1463	1463	2150
36"	607-97000	46.10	46.10	46.10	46.10			21.38	46.00	50.00	46.00	50.00	24.87	1529	2083	2083	3125
42"	831-132900	48.05	not offered	48.05	not offered			21.38	52.75	not offered	52.75	not offered	27.56	2113	2852	contact factory	
48"	1091-174440	50.00		50.00				21.38	59.50		59.50		30.56	2445	3139		

*Shipping weights are estimated and may change due to specific order packaging
** DIM D represents the remote transmitter height in relation to the meter centerline.

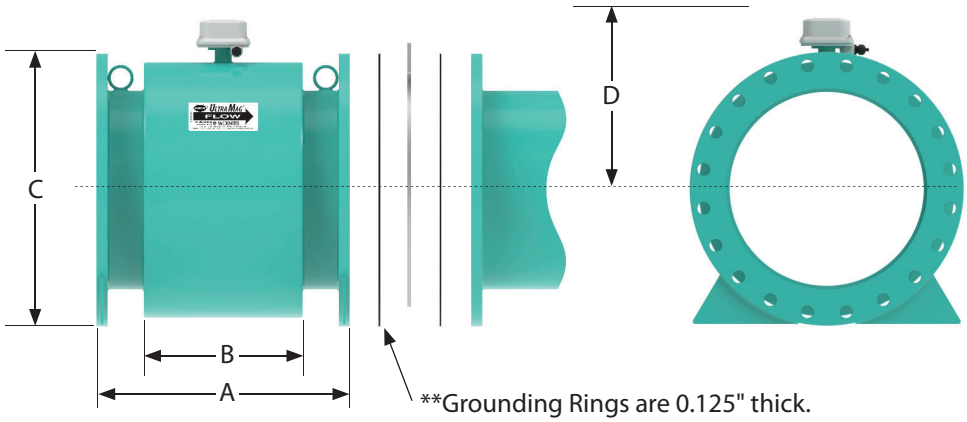

Ultra Mag 3000 Part Number Matrix

UM3	-									-		-		-		-		-	
Nominal Line Size																			
1.5"	0C																		
2"	02																		
2.5"	0D																		
3"	03																		
4"	04																		
6"	06																		
8"	08																		
10"	10																		
12"	12																		
14"	14																		
16"	16																		
18"	18																		
20"	20																		
24"	24																		
Flange Connections																			
AWWA Class D (150 psi Rating) *(Standard)*		1																	
ANSI Class 150# (285 psi Rating)		2																	
ANSI Class 300# (300 psi Rating)		3																	
AWWA Class F (300 psi Rating)		4																	
Wafer Style (2 & 3" Only)		N																	
Electrode Material Options																			
S316 Stainless Steel *(Standard)*			S																
Hastelloy			H																
Converter Mounting and Cable Connector Options																			
Meter Mount Converter				M															
IP68 Strain Relief [Remote Mount] (Standard)				R															
IP68 Quick Connect Potted Connector [Remote Mount]				Q															
Converter Power Options																			
Battery Power *(Standard)*					B														
Solar Power, Battery Backup					S														
A/C Power, Battery Backup					E														
DC Power, Battery Backup					F														
Converter Output Options																			
No Outputs *(Standard)*																			
No Outputs, DC cable only						0													
Two Digital Out						1													
4-20mA Analog only						2													
4-20mA Analog + Two Dig Out						3													
DC Power/ Analog Out Cable Options																			
No DC Power or Outputs *(Standard)*																			
No Cable - Output Configured (Quick Conn)							0												
6 ft (Open Leads)							1												
25 ft (Open Leads)							2												
50 ft (Open Leads)							3												

Ultra Mag 3000 Part Number Matrix (cont.)

UM3	-							-		-		-		-		-		-	
Pulse Cable Length Options																			
No Outputs *(Standard)*																			
No Cable - Output Configured (Quick Conn)		0																	
6 ft (Open Leads)		1																	
25 ft (Open Leads)		2																	
50 ft (Open Leads)		3																	
Output Cable Terminal Options																			
Strain Relief			1																
Quick Connect Cable Terminals			2																
Smart Output Protocol / SmartTrax Options																			
No AMI Outputs/SmartTrax Options																			
Sensus Protocol (6ft cable, Nicor Connector hardwired only)				SEN															
Itron 6 digit Protocol (6ft cable, Nicor Connector hardwired only)				IT6															
Itron 9 digit [100W] Protocol (6ft cable, Nicor Connector hardwired only)				IT9															
Neptune Protocol (6ft cable, Nicor Connector hardwired only)				NEP															
2 ft SmartTrax Standalone Unit ExactRead Cable (Strain Relief Only)				S02															
6 ft SmartTrax Standalone Unit ExactRead Cable (Strain Relief Only)				S06															
25 ft SmartTrax Standalone Unit ExactRead Cable (Strain Relief Only)				S25															
50 ft SmartTrax Standalone Unit ExactRead Cable (Strain Relief Only)				S50															
Non Standard Length Options																			
McCrometer Length *(Standard)*																			
ISO Length (Only Available in ANSI)								ISO											
Competitor Replacement Length								LS	Select										
Competitor Replacement Length								LP	Length										
Custom Specified Length (Nominal Length)								L(XX)											
Color Options																			
McCrometer Green (Standard)																			
Sky Blue											SB								
Dark Blue											DB								
Lavender											LV								
White											WH								
No Batteries, Battery Tray Options																			
Includes Batteries (Standard)																			
No Batteries (Alkaline Tray)														NBA					
No Batteries (Lithium Tray)														NBL					
Canadian Registration Certified																			
No CRN Needed																			
CRN Certified (Sizes 4-12" ANSI Flanges Only)																CRN			
Hazardous Area Location																			
No Hazardous Location Needed																			
Class 1, Division 2, Groups A-D, T5																			HL

Ultra Mag 5000 Part Number Matrix

UM5	-								-		-		-		-		-		-	
Nominal Line Size																				
1.5"	0C																			
2"	02																			
2.5"	0D																			
3"	03																			
4"	04																			
6"	06																			
8"	08																			
10"	10																			
12"	12																			
14"	14																			
16"	16																			
18"	18																			
20"	20																			
24"	24																			
30"	30																			
36"	36																			
42"	42																			
48"	48																			
End Connection Options																				
AWWA Class D (150 psi Rating) *(Standard)*		1																		
ANSI Class 150# (285 psi Rating)		2																		
ANSI Class 300# (300 psi Rating)		3																		
AWWA Class F (300 psi Rating)		4																		
Wafer Style (2 & 3" Only)		N																		
Electrode Material Options																				
S316 Stainless Steel *(Standard)*			S																	
Hastelloy			H																	
Transmitter Mounting and Cable Connector Options																				
Meter Mount Converter				M																
IP68 Strain Relief [Remote Mount] (Standard)				R																
'68 Quick Connect Potted Connector [Remote Mount]				Q																
Remote Cable Length Options																				
Meter Mount Converter [No remote Cable]					000															
25 feet (Standard)					025															
50 feet					050															
75 feet					075															
100 feet					100															
125 feet					125															
150 feet					150															
175 feet					175															
200 feet					200															
500 feet					500															

Ultra Mag 5000 Part Number Matrix (cont.)

UM5 -				-		-		-		-		-		-	
Transmitter Power Options															
A/C Power	A														
DC Power	D														
Transmitter Analog/Hart Output Options															
Single 4-20mA Analog, Dual Digital (Standard)		1													
Dual 4-20mA Analog, Dual Digital		2													
1 Hart 4-20mA Analog, 1 Standard 4-20mA Analog, Dual Digital		3													
Transmitter Digital Output Options															
No Digital Protocol Outputs															
Modbus Protocol			MOD												
Ethernet IP Protocol *Future Option			EIP												
Output Protocol Types															
No Digital outputs															
RTU (RS485) Output (Modbus)				R											
TCP/IP Output (Modbus, Ethernet IP)				E											
Smart Output Protocol / SmartTrax Options															
No AMI Outputs/ SmartTrax															
Sensus Protocol (6ft cable, Nicor Connector hardwired only)					SEN										
Itron 6 digit Protocol (6ft cable, Nicor Connector hardwired only)					IT6										
Itron 9 digit [100W] Protocol (6ft cable, Nicor Connector hardwired only)					IT9										
Neptune Protocol (6ft cable, Nicor Connector hardwired only)					NEP										
2 ft SmartTrax Standalone Unit ExactRead Cable (Strain Relief Only)					S02										
6 ft SmartTrax Standalone Unit ExactRead Cable (Strain Relief Only)					S06										
25 ft SmartTrax Standalone Unit ExactRead Cable (Strain Relief Only)					S25										
50 ft SmartTrax Standalone Unit ExactRead Cable (Strain Relief Only)					S50										
Non Standard Length Options															
McCrometer Length *(Standard)*															
ISO Length (Only Available in ANSI)						ISO									
Competitor Replacement Length						LS	Select								
Competitor Replacement Length						LP	Length								
Custom Specified Length (Nominal Length)						L(XX)									
Accuracy Options															
Please select Value															
Standard Accuracy 0.5% Calibration															
High Accuracy 0.2% Calibration									HA						
Color Options															
McCrometer Green (Standard)															
Sky Blue										SB					
Dark Blue										DB					
Lavender										LV					
White										WH					
Canadian Registration Certified															
No CRN Needed															
CRN Certified (Sizes 4-12" ANSI Flanges Only)												CRN			
Hazardous Area Location															
No Hazardous Location Needed															
Class 1, Division 2, Groups A-D, T5															HL

ProComm GO Specifications

Physical Specifications

Electronic Housing	Diecast aluminum, powder coated enclosure w/ tamper resistant seal, 6½" x 6½" x 43/8" tall
Transmitter Dimensions	See "Dimensions" section for meter mount and remote mount transmitter dimensions.
Power	**Battery:** Standard: three 3.6V lithium-thionyl chloride (Li-SOCI2) D size batteries with two AA backup batteries **AC Power:** 100-240VAC/45-66Hz (4W) **DC Power:** Linear power supply 10-35VDC (4 W)
Electrical Connections	• Optional shielded cable for 10-32VDC/4-20 mA output • Optional shielded cable for pulse out

Performance and Operational Specifications

Battery Life	Five-year expected battery life, five-year battery warranty
Location	Indoor or outdoor use
Altitude	Operating: 2000 meters Storage: 12,000 meters
Operating Temperature	-4° to 140° F (-20° to 60° C)
Storage Temperature	-4° to 140° F (-20° to 60° C)
Relative Humidity	0% to 100%
IP Rating	IP67 Die cast aluminum transmitter
Outputs	**Digital output:** Digital pulse (open collector) output for volumetric - Two isolated digital pulse (open collector) outputs for volumetric - AMI output **Analog output:** 4-20mA: Galvanically Isolated, 16 Bit resolution. All power configurations (including battery). Note: 9-30 VDC loop power required (not supplied via transmitter)

Display and Measurement

Display	• 2-Line LCD display (no backlight) • Non-volatile memory • Anti-reverse totalizer (standard) • Total (to 9 digits of precision)	• Flow rate and velocity (to 5 digits of precision) • Two alarms: low battery and empty pipe (optional) • Opening lid activates display
Digits	5 Rate, 9 Total	

Units

GPM	Gallons per minute	IGM	Imperial gal per minute	CFM	Cubic feet per minute
MGD	Mega gal per day	MI9	Miners inch (9G)	B5M	Barrels per minute (55G)
CFS	Cubic feet per second	MI1	Miners inch (11.22G)	B5H	Barrels per hour (55G)
MLD	Megaliters per day	APD	Acre feet per day	B5D	Barrels per day (55G)
LPS	Liters per second	KLH	Kiloliters per hour	B4M	Barrels per minute (42G)
CMH	Cubic meters per hour	LPH	Liters per hour	B4H	Barrels per hour (42G)
LPM	Liters per minute	CMM	Cubic meters per minute	B4D	Barrels per day (42G)
GPH	Gallons per hour	CFM	Cubic feet per minute		

ProComm GO Specifications (cont.)

Display and Measurement (cont.)

Totalizer Units

GAL	Gallons	B42	Barrel (42G)	MH1	Miners Inch Hour (11.22G)
CUF	Cubic Feet	B46	Barrel (46G)	MD1	Miners Inch Day (11.22G)
AFT	Acre Feet	B55	Barrel (55G)	MH9	Miners Inch Hour (9G)
CUM	Cubic Meters	IMG	Imperial Gallon	MD9	Miners Inch Day (9G)
LIT	Liters	AIN	Acre Inch	KGL	Kilo Gallons
MML	Megaliter	TON	Ton (Short)	MGL	Mega Gallons
MTT	Metric Ton (KL)	MM1	Miners Inch Minute (11.22G)	IN3	Cubic Inch
B31	Barrel (31G)	MM9	Miners Inch Minute (9G)		

Data Logger

Standard with all models, minimum of five years of data stored

Other Specifications

Options and Accessories

- Data Logger - included as standard with five years of data storage at default (12hr) interval. (Cable sold separately)
- AC, DC, and battery powered with battery backup powered available

Safety

- IEC 61010-1, Pollution Degree II
- Overvoltage protection Category III

Certifications

Standard Model

- ISO 9001:2015 certified quality management system
- CE
- Certified by MET to UL 61010-1

HL Model

- ISO 9001:2015 certified quality management system
- CE
- Certified by MET to UL 61010-1 and MET C22.2 No. 61010-1-04
  - Class I, Division 2, Groups A B C D, T4
  - Class I, Zone 2, IIC T4

Note: ProComm GO with SmartTrax On Board is not available for hazardous locations.

ProComm Max Specifications

Physical Specifications

Electronic Housing	Diecast aluminum, powder coated enclosure w/ tamper resistant seal
Transmitter Dimensions	Remote Mount: Height: 7.3" (18.5 cm) Width: 8.5" (21.6 cm) Depth: 4.3" (10.9 cm) Meter Mount: Height: 6.9" (17.5 cm) Width: 7.2" (18.25 cm) Depth: 6.2" (15.7 cm)
Power	AC Power: 100-240 VAC / 47-66 Hz (10 W) DC Power: 10-35 VDC (10 W) Note: AC or DC must be specified at time of ordering.
Connection Options	Conduit option: 1/2" NPT threaded connections
Galvanic Isolation	All outputs are galvanically isolated from power supply up to 500 V
Conductivity	Minimum conductivity of 5µS/cm

Performance and Operational Specifications

Location	Indoor or outdoor use
Operating and Storage Temperature	-4° to 140° F (-20° to 60° C)
IP Rating	IP67 Die cast aluminum transmitter
Standard Outputs	Single 4-20mA (standard). Galvanically isolated and fully programmable for zero and full scale. A second 4-20mA is available. Two separate digital programmable outputs: open collector transistor usable for pulse, frequency, or alarm settings. • Volumetric Pulse • Range Indication • Maximum switching voltage: 35 VDC • Maximum switching current: 100mA • Insulation from other secondary circuits: 500V
Optional Outputs	• Modbus • HART • Ethernet IP • Datalogger • Smart Output™ (Sensus, Itron 6, Itron 9)

Display and Measurement

Keyboard and Display	Can be used to access and change set-up parameters using six membrane keys and an LCD display
Units	GAL Gallons, CUF Cubic Feet, AFT Acre Feet, CUM Cubic Meters, LIT Liters, MML Megaliter, MTT Metric Ton (KL), B31 Barrel (31G), B42 Barrel (42G), B46 Barrel (46G), B55 Barrel (55G), IMG Imperial Gallon, AIN Acre Inch, TON Ton (Short), MM1 Miners Inch Minute (11.22G), MM9 Miners Inch Minute (9G), MH1 Miners Inch Hour (11.22G), MD1 Miners Inch Day (11.22G), MH9 Miners Inch Hour (9G), MD9 Miners Inch Day (9G), KGL Kilo Gallons, MGL Mega Gallons, IN3 Cubic Inch

Other Specifications

• ISO 9001:2015 certified quality management system • CE	

ProComm GO Transmitter Dimensions

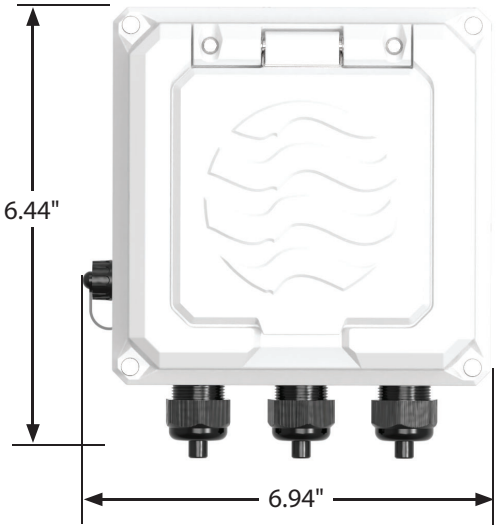

Meter mount converter

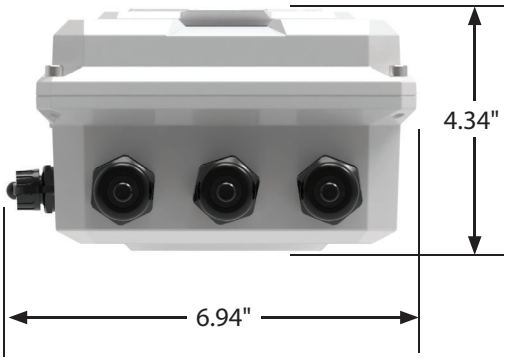

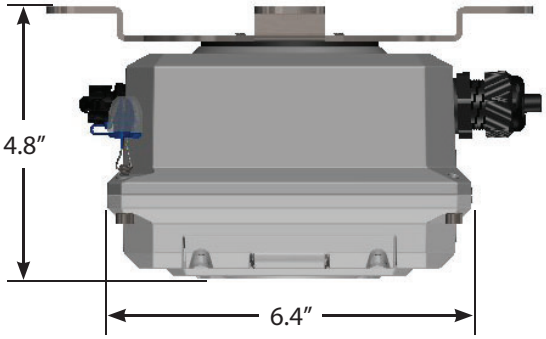

Remote mount converter

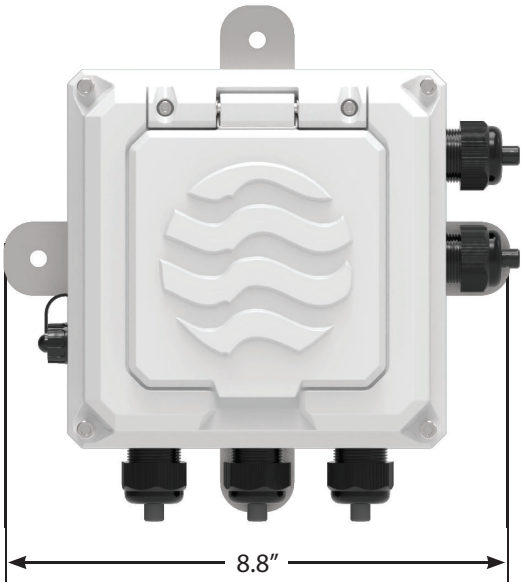

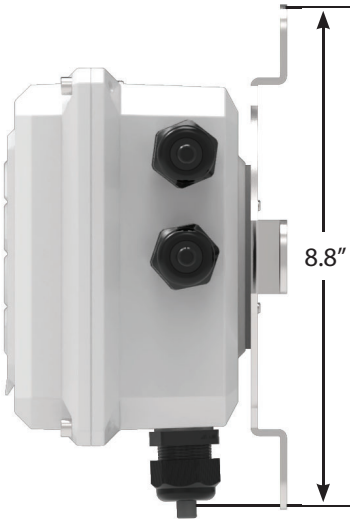

ProComm Max Transmitter Dimensions

Height 6.9" (17.6 cm)
Width7.4" (18.8 cm)
Depth 5.6" (14.2 cm)

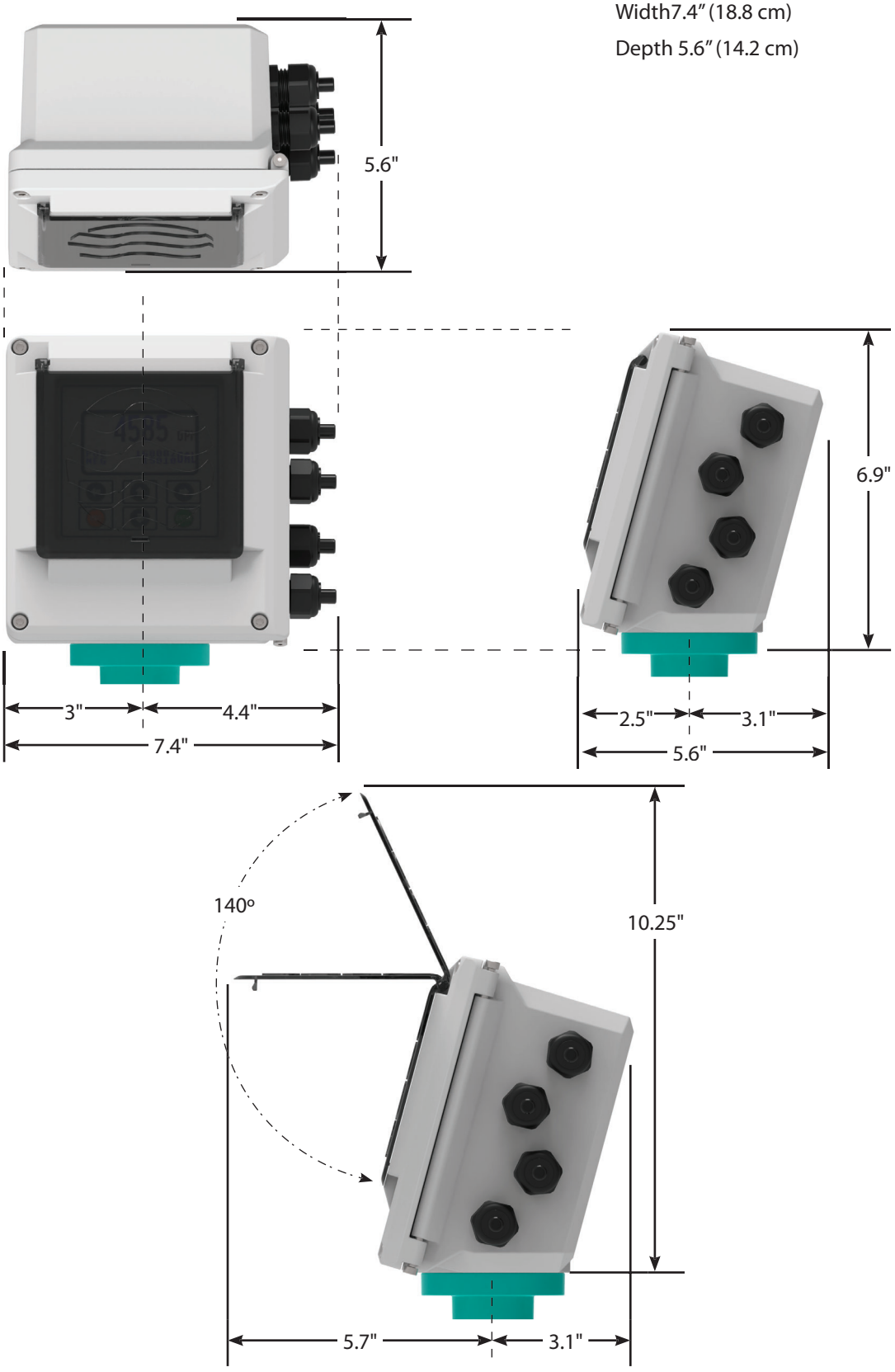

ProComm Max Transmitter Dimensions (cont.)

Height 7.4" (18.9 cm)
Width 8.5" (21.6 cm)
Depth 4.4" (11.2 cm)

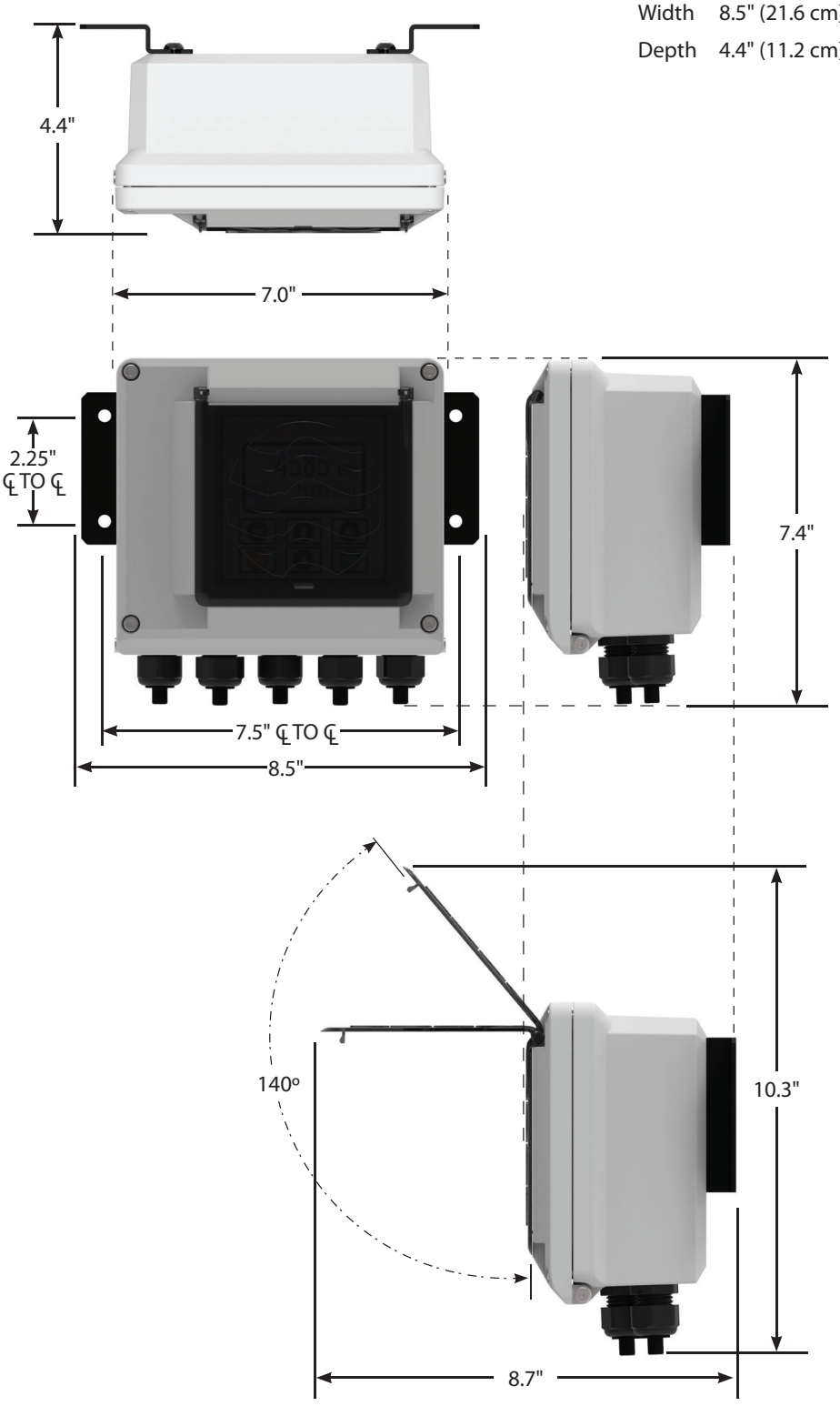



McCrometer, Inc.
3255 West Stetson Avenue
Hemet, CA 92545 USA
Tel: 951-652-6811
800-220-2279
Fax: 951-652-3078
customerservice@mccrometer.com
www.mccrometer.com

USA Copyright © McCrometer, Inc. All printed material should not be changed or altered without permission of McCrometer. Any published pricing, technical data, and instructions are subject to change without notice. Contact your McCrometer representative for current pricing, technical data, and instructions.