POWER REQUIREMENTS
- 115/230 VAC, 60Hz

SAMPLE TEMPERATURE
- 2-60 °C (35-104 °F)

SAMPLE PRESSURE
- 75 psig (5.2 bar) MAXIMUM

PROCESS CONNECTION
- SAMPLE INLET: 1/4" OD TUBE
- SAMPLE OUTLET: 1/4" OD TUBE

WEIGHT
- 19.9 kg (43.8 lb)

REVISION			
REV	**DESCRIPTION**	**ECO #**	**DATE**
A	PRODUCTION RELEASE		12/31/2025

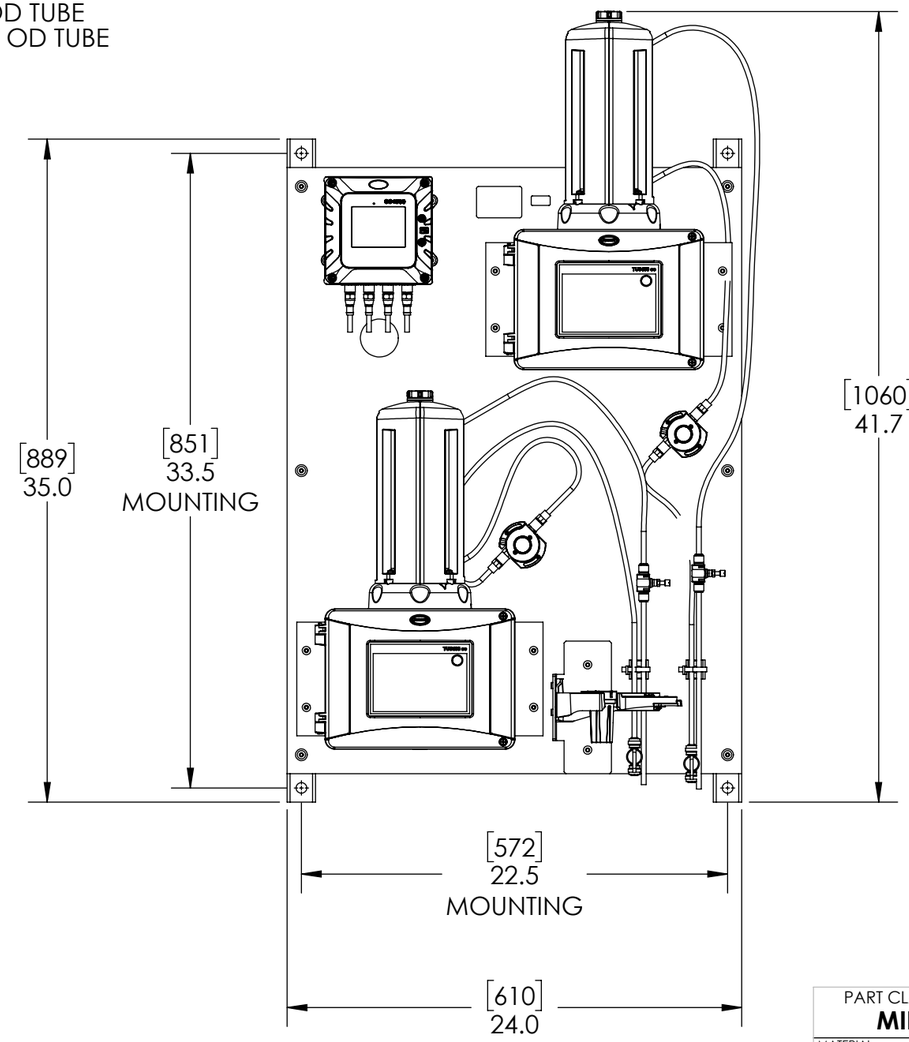

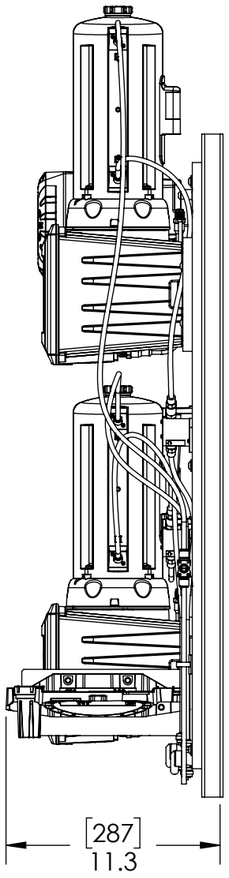

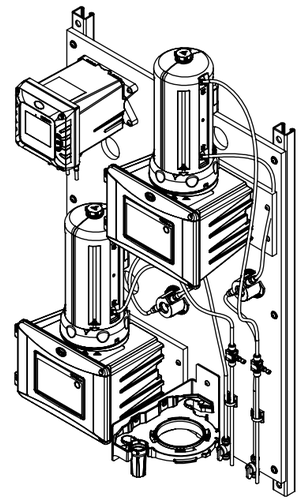

PART CLASSIFICATION	THE SOLID CAD FILE IS THE CONTROLLING AUTHORITY FOR PART GEOMETRY
MINOR B	**UNLESS OTHERWISE SPECIFIED:**
MATERIAL	DIMENSIONS ARE IN INCHES [MM]
HACH MATERIAL PART NUMBER	TOLERANCES: .X = ±.03 .XX = ±.01 .XXX = ±.005 ANGLES = ±.5°

NOTICE: HACH COMPANY CLAIMS PROPRIETARY RIGHTS IN THE INFORMATION DISCLOSED ON THIS DRAWING. IT IS ISSUED IN CONFIDENCE FOR ENGINEERING INFORMATION ONLY AND MAY NOT, IN WHOLE OR IN PART, BE USED TO MANUFACTURE ANYTHING, WHETHER OR NOT SHOWN HEREON, REPRODUCED OR DISCLOSED TO ANYONE WITHOUT DIRECT PERMISSION FROM HACH COMPANY.

ALL MOLDED PART FEATURES SHALL BE HELD TO SURFACE PROFILES AS FOLLOWS:
- .010 FOR FEATURES < 4.0"
- .020 FOR FEATURES > 4.0" -10.0"
- .040 FOR FEATURES > 10.0"

	NAME	DATE
ENGINEER	A. POTT	07/29/2025
DRAWN	A. POTT	1/8/2026
CHECKED		
PRODUCTION	Petersen, Troy	12/31/2025

INTERPRET GEOMETRIC TOLERANCING PER: ANSI Y14.5

THIRD ANGLE PROJECTION

DO NOT SCALE DRAWING

HACH COMPANY
5600 LINDBERGH DR.
LOVELAND, CO. 80538

TITLE: TRANSMITTAL DRAWING, DPMP-2X TU5

SIZE	DWG. NO.	REV
B	10997087	A

SCALE: 1:8 SHEET 1 OF 1