NOTES:
1. ALL DIMENSIONS ARE IN INCHES [ MILLIMETERS].

| REVISION | | |
|---|---|---|
| REV | DESCRIPTION | APPROVED |
| B | REVISED PER R-2821-06 | |

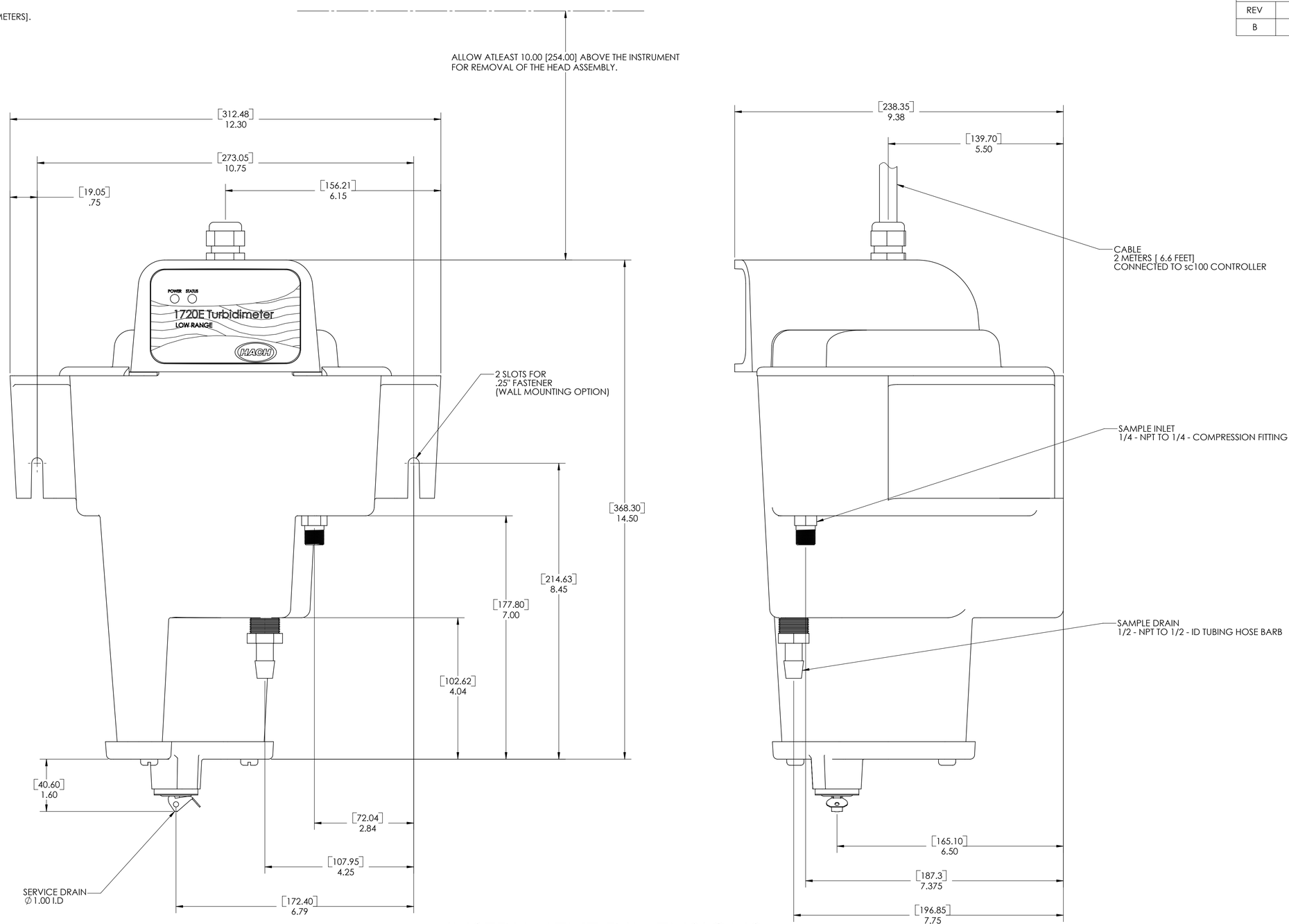


# INSTRUMENT DIMENSIONS

## GENERAL INFORMATION:

1. TURBIDIMETER IS DESIGNED FOR WALL MOUNTING OR OPTIONAL FLOOR STAND MOUNTING.
2. THE SENSOR MUST BE MOUNTED WITHIN 6 FEET OF THE CONTROLLER UNLESS EXTENSION CABLE TO BE USED. THE MAXIMUM CABLE LENGTH IS 9.6 M (31 FEET).
3. INSTALL IN A LOCATION FREE FROM VIBRATION.
4. OPERATING RANGE: .001 - 100 NEPHELOMETRIC TURBIDITY UNITS (NTU).
5. OPERATING TEMPERATURE: 0 TO 50°C (32 -122°F) FOR SINGLE SENSOR SYSTEM, 0 TO 40°C (32 -104°F) FOR TWO SENSOR SYSTEM.
6. OPERATING HUMIDITY: 5 TO 95% NON-CONDENSING.
7. POWER REQUIREMENTS: 12 VDC ± 5%, 12.5 WATTS MAXIMUM.
8. SENSOR CABLE RATING:
   CABLE: 105°C, 300 V, PVC JACKET AND WIRES: 22 AWG, PVC JACKET.
9. SHIPMENT WEIGHT:
   1720E TURBIDIMETER AND CONTROLLER: 6.31 Kg (13.5 lb); 1720E TURBIDIMETER ONLY: 4.71 Kg (10 lb).

NOTICE-HACH COMPANY CLAIMS PROPIETARY RIGHTS IN THE INFORMATION DISCLOSED ON THIS DRAWING. IT IS ISSUED IN CONFIDENCE FOR ENGINEERING INFORMATION ONLY AND MAY NOT, IN WHOLE OR IN PART, BE USED TO MANFACTURE ANYTHING, WHETHER OR NOT SHOWN HEREON, REPRODUCED OR DISCLOSED TO ANYONE WITHOUT DIRECT PERMISSION FROM HACH COMPANY.

MATERIAL: RESIN, POLYSTYRENE BLACK

UNLESS OTHERWISE SPECIFIED:
DIMENSIONS ARE IN INCHES
TOLERANCES:
X = ±
XX = ±
XXX = ±
ANGLES = ±

INTERPRET GEOMETRIC TOLERANCING PER: ANSI Y14.5M 1994

DO NOT SCALE THIS SHEET

| | NAME | DATE |
|---|---|---|
| DRAWN | TCS | 10/04/06 |
| ENGINEER | TCS | 10/04/06 |

THIRD ANGLE PROJECTION

HACH COMPANY
5600 LINDBERH DR.
LOVELAND, CO. 80539

TITLE: TRANSMITTAL, 1720E SENSOR ASSEMBLY

| SIZE | DWG. NO. | REV |
|---|---|---|
| D | 6010187 | B |

SCALE: 2:3 | WEIGHT: | SHEET 1 OF 1