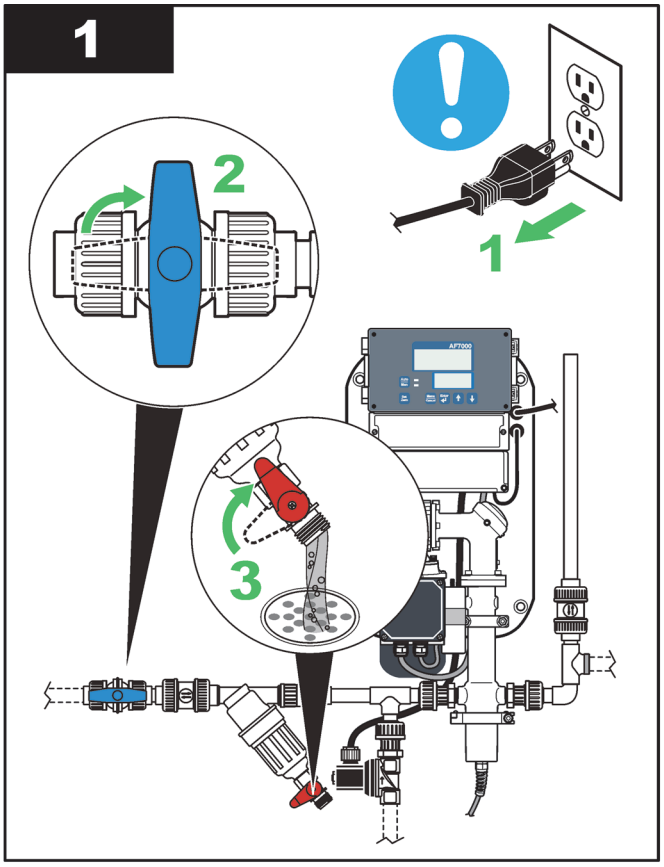
1
2
1
3

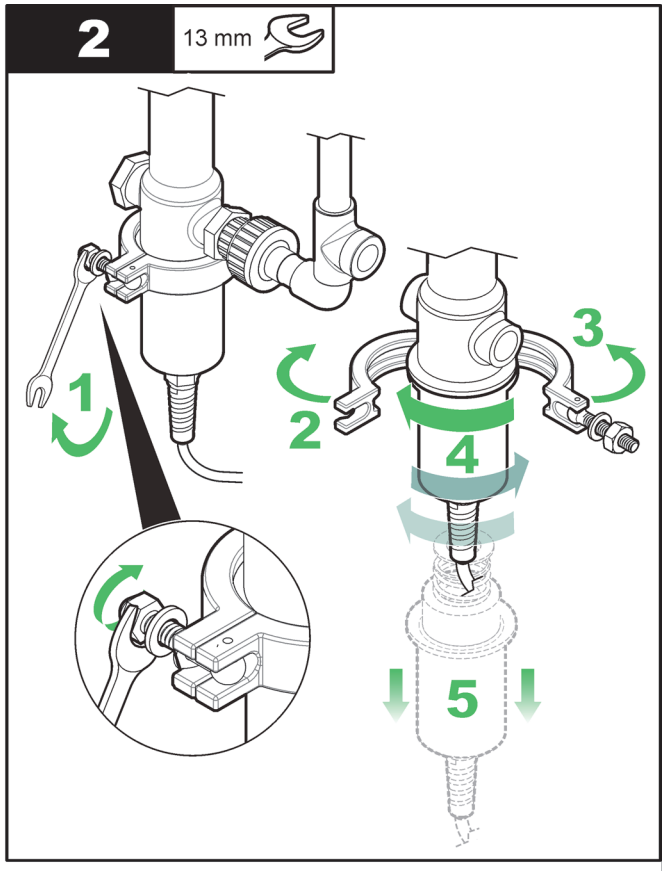
2
13 mm
1
2
3
4
5

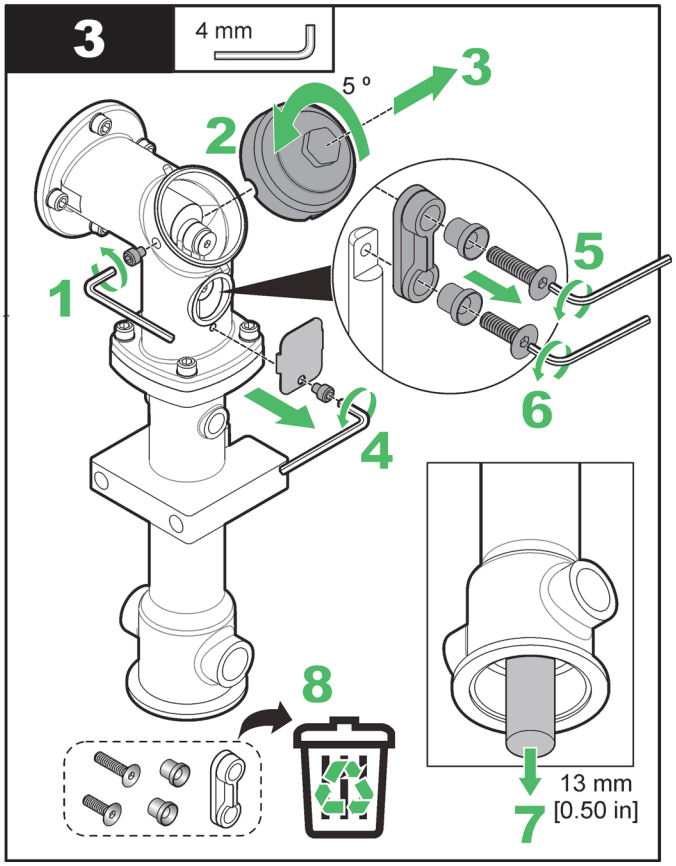
3
4 mm
5 °
3
2
1
5
6
4
8
13 mm
[0.50 in]
7

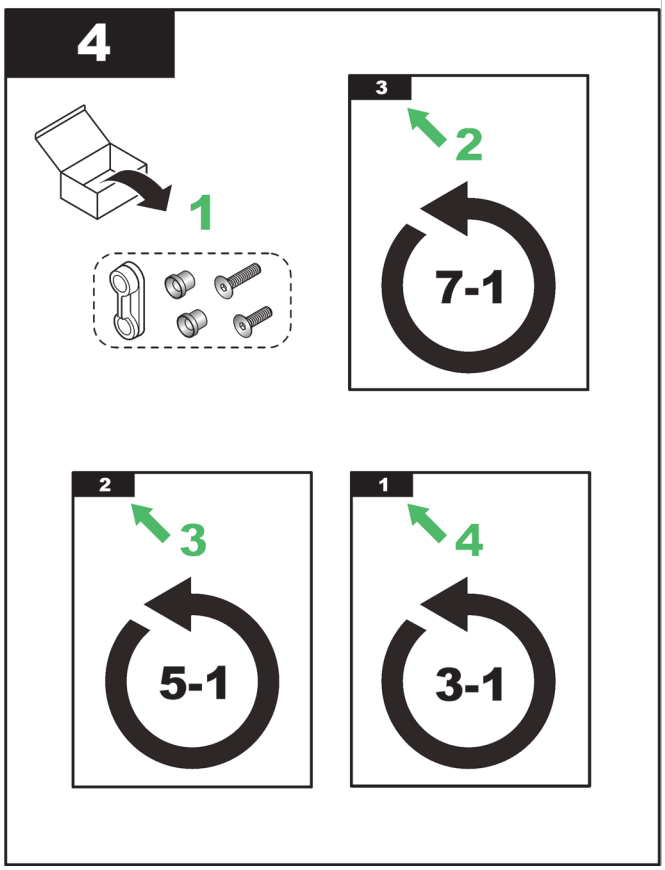
4
1
3
2
7-1
2
3
5-1
1
4
3-1

HACH COMPANY World Headquarters
P.O. Box 389, Loveland, CO 80539-0389 U.S.A.
Tel. (970) 669-3050
(800) 227-4224 (U.S.A. only)
Fax (970) 669-2932
orders@hach.com
www.hach.com

HACH LANGE GMBH
Willstätterstraße 11
D-40549 Düsseldorf, Germany
Tel. +49 (0) 2 11 52 88-320
Fax +49 (0) 2 11 52 88-210
info@hach-lange.de
www.hach-lange.de

HACH LANGE Sàrl
6, route de Compois
1222 Vésenaz
SWITZERLAND
Tel. +41 22 594 6400
Fax +41 22 594 6499



© Hach Company/Hach Lange GmbH, 2012. All rights reserved. Printed in U.S.A.
06/2012, Edition 1