Monitoring CO_2 Purity In A Brewery

Introduction

Carbon dioxide in the brewery is recovered during fermentation with two main criteria: avoid presence of air with critical impact on the final product taste and shelf life. Additionally, a maximum CO_2 recovery yield is expected. In this application report, HACH's solutions for reliable oxygen measurement into the recovered CO_2 are presented.

Measuring technologies

Electrochemical technology

Over the years, this technology has been proven and provides unsurpassed sensitivity and accuracy for oxygen trace monitoring. Since the CO_2 measured is dry, early generation EC sensors had electrolyte depletion which meant having to refill the sensor with electrolyte on a regular basis. With current technology, however, there is a seal on the sensor head which helps prevent the electrolyte from leaking and causing measurement problems. The threaded protection cap fitting helps maintain the membrane placement and avoids calibration drifts.

Luminescent technology

In this technology, a sensitive dye will have optical properties changed (luminescence) when in contact with oxygen. As with all optical devices, and contrary to historical EC technology, the huge benefit provided is a much lower dependence on calibration and service operations. The Limit Of Detection (LOD) is 17 ppmV when it is about 2 ppmV for the EC sensor. Accuracies are of the same magnitude.

Sampling and setup

Two main sampling solutions exist: off line and in line. Each variant will be described first and evaluated using EC and LDO sensors.

Off line with EC sensor

This variant requires an ORBISPHERE model 32001 flow chamber (1) where the oxygen sensor is attached.

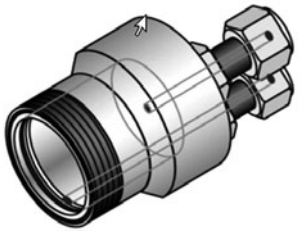

Fig. 1 Orbisphere flow cell 32001

A 6 mm or ¼" pipe draws the sample from the main CO_2 line. This was historically the first setup described below (2).

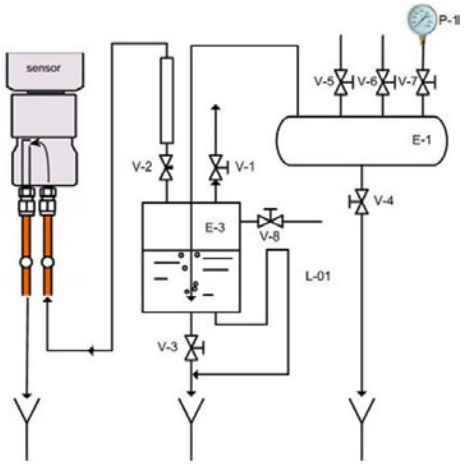

Fig. 2 CO_2 sampling setup

Principle: CO_2 coming from several fermenters first goes in the collector E-1. Valves V-5 to V-7 allows choosing of the feeding line, or to connect the water inlet or an oxygen analyser for validation or calibration purposes. A pressure gauge P-1 indicates the gas pressure. The valve V-4 allows purging the collector of foam and other residues. The collected CO_2 goes to the vessel E-3 where it is saturated with water in order to reduce the electrochemical sensor drying effect when measuring in dry gases.

When opened, the valve V-1 purges the vessel. Water enters through V-8 and the pipe L-01 acts as a spillway in order to maintain the water at a given level when refilling the vessel. V-3 is the vessel water purge. The needle valve V-2 adjusts the flow that is indicated in the flowmeter (rotameter type). The flowmeter should never be installed at the flow chamber outlet because the correct O_2 concentration is shown when the sensor works at ambient pressure, after the needle valve. Typical sample flow of 1–5 mL/min is very low and does not generate any health or safety issues.



Fig. 3 CO_2 sampling for flow cell 32001 and EC sensor

Off line with LDO sensor

Dry gas measurement is not an issue with LDO sensors. For this reason the previous setup can be simplified by removing the humidifier vessel.

In line

The direct in-line sampling is facilitated using the ORBISPHERE self-sealing "ProAcc" valve, combined with the Varivent™ housing (Fig 4).



Fig. 4 Principle of the ProAcc self-sealing valve

Inserting any LDO or EC sensor opens a chamber where part of the main stream will flow. The opposite happens when removing the sensor, with the main benefit being to avoid a process interruption as the line always remains with the gas flow inside.

Nevertheless, the consequence is that the sensor is measuring the total oxygen pressure and therefore needs to be compensated by the total pressure of the line.

Variant comparisons

Today there are three options available for oxygen measurement in CO_2 recovery by combining sampling and detection technologies. None of them shows exclusive benefits. While off line variants offer flexibility for service and allow different CO_2 source connections, the in-line variant has less complexity. The LDO requires less maintenance but has an LOD of 17 ppmV against 2 ppmV for the EC sensor. The EC technology therefore is more appropriate for high CO_2 purity monitoring or for validation purpose with an external analyser used as reference.

	Off line		In line	
Criteria	EC	LDO	EC	LDO
Lowest detection level [ppmV]	2	20	2	n/a
Accuracy [ppmV]	±2	±17	±2	
No additional pressure sensor	+ + +	+ + +	---	
Long term stability	+	+ +	-	
Sensor extraction without process interruption	+ + +	+ + +	+ + +	
Validation with external reference	+ + +	+ + +	-	
Response time after service	-+	+ + +	-+	
Maintenance frequency	+	+ +	-	
Complexity	+	+ +	+ + +	
Cost	+	+	+	

Author: Georges Schmidt
Product Application Manager, HACH LANGE

DOC043.53.30204.Feb15

HACH COMPANY World Headquarters: Loveland, Colorado USA
United States: 800-227-4224 tel 970-669-2932 fax orders@hach.com
Outside United States: 970-669-3050 tel 970-461-3939 fax int@hach.com
hach.com

©Hach Company, 2015. All rights reserved.
In the interest of improving and updating its equipment, Hach Company reserves the right to alter specifications to equipment at any time.

HACH®
Be Right™