SWMP-OVERALL DIMENSIONS

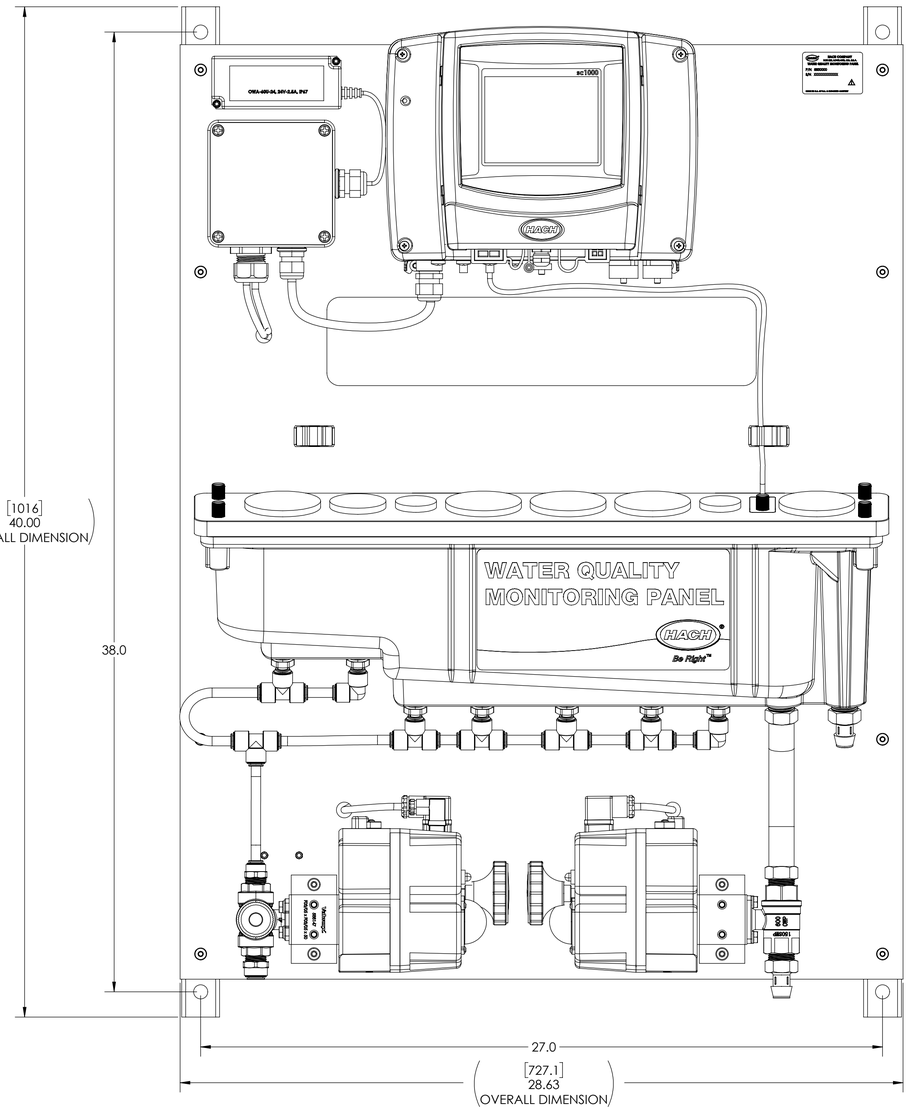

[1016]
40.00
(OVERALL DIMENSION)

[727.1]
28.63
(OVERALL DIMENSION)

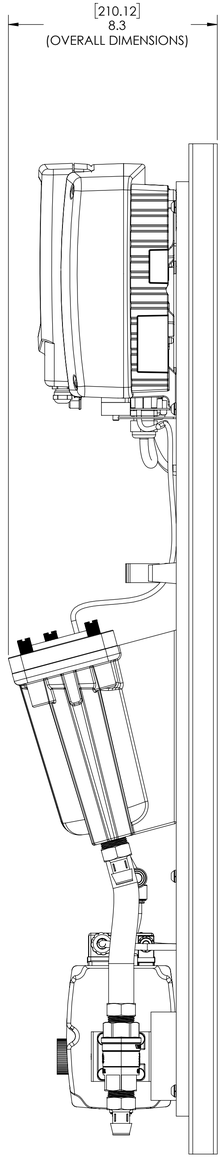

[210.12]
8.3
(OVERALL DIMENSIONS)

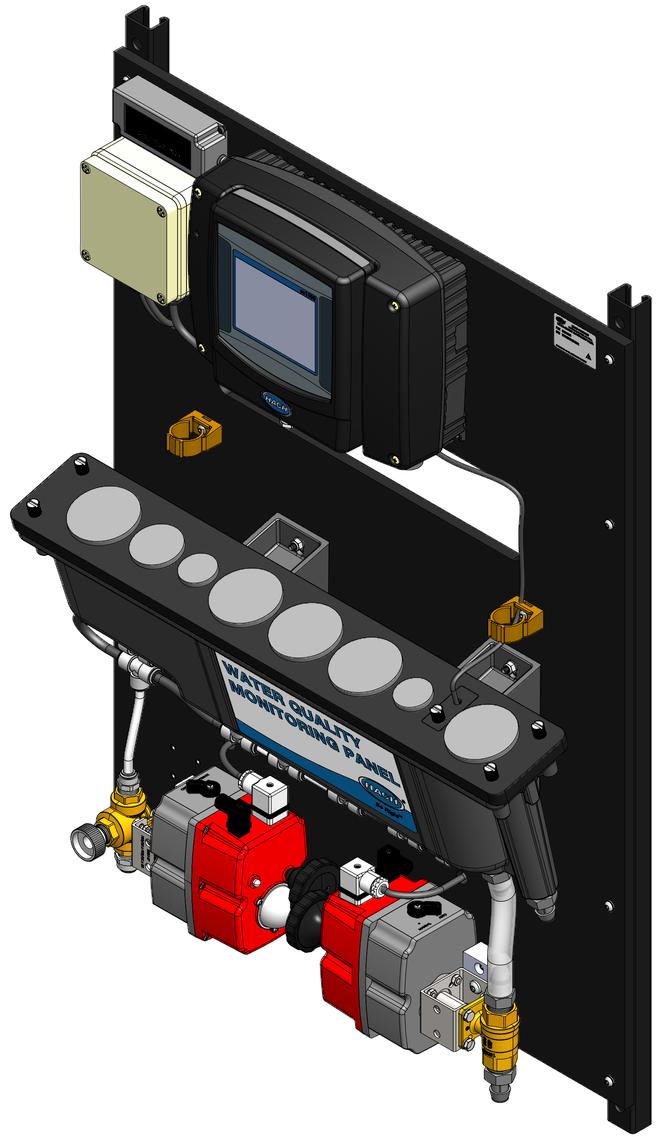

NOTICE: HACH COMPANY CLAIMS PROPRIETARY RIGHTS IN THE INFORMATION DISCLOSED ON THIS DRAWING. IT IS ISSUED IN CONFIDENCE FOR ENGINEERING INFORMATION ONLY AND MAY NOT, IN WHOLE OR IN PART, BE USED TO MANUFACTURE ANYTHING, WHETHER OR NOT SHOWN HEREON, REPRODUCED OR DISCLOSED TO ANYONE WITHOUT DIRECT PERMISSION FROM HACH COMPANY.

HACH COMPANY
5600 LINDBERGH DR.
LOVELAND, CO. 80538

SIZE	DWG. NO.	REV
D	8830000	--

SCALE: 1:3 SHEET 1 OF 1