User Instructions

DOC273.54.00094

Acidification Unit for 9180sc Sensors

Safety information

Please read this entire manual before unpacking, setting up or operating this equipment. Pay attention to all danger and caution statements. Failure to do so could result in serious injury to the operator or damage to the equipment.

Make sure that the protection provided by this equipment is not impaired, do not use or install this equipment in any manner other than that specified in this manual.

Use of hazard information

⚠ DANGER

Indicates a potentially or imminently hazardous situation which, if not avoided, will result in death or serious injury.

⚠ WARNING

Indicates a potentially or imminently hazardous situation which, if not avoided, could result in death or serious injury.

⚠ CAUTION

Indicates a potentially hazardous situation that may result in minor or moderate injury.

NOTICE

Indicates a situation which, if not avoided, may cause damage to the instrument. Information that requires special emphasis.

Precautionary Labels

Read all labels and tags attached to the instrument. Personal injury or damage to the instrument could occur if not observed. A symbol on the instrument is referenced in the manual with a precautionary statement.

	This symbol, if noted on the instrument, references the instruction manual for operation and/or safety information.
	Electrical equipment marked with this symbol may not be disposed of in European domestic or public disposal systems. Return old or end-of-life equipment to the manufacturer for disposal at no charge to the user.

Introduction

The Acidification Unit (Cat. No. LZY051) pumps an acid solution to the 9180sc sensor to either clean the sensor or lower the sample pH for the 9184sc free chlorine sensor. The unit is installed near the sensor and powered by the sc100 or sc1000 controller. Various acids can be used (see Operation on page 7).

Cleaning

Clean any of the 9180sc sensors such as the 9184sc, 9185sc, or 9187sc sensors for Chlorine, Ozone, or Chlorine Dioxide, respectively, at specified intervals by using the high-flow pump tubing in the Acidification Unit and the controller relays to set a cleaning interval.

Acidify Chlorine Samples

The 9184sc Chlorine Analyzer measures HOCl (hypochlorous acid). The accuracy of the analyzer decreases above a certain pH level, therefore it may be necessary to lower the sample pH. Acidify the sample when the pH is greater than 8 for the HOCl analyzer or when the pH is

greater than 7.5 for the TFC analyzer to maintain an accuracy of ± 2%. Sensor accuracy diminishes rapidly above these pH levels.

Components

The following components are included with the Acidification Unit:

- Panel with pump, on/off switch, and junction box
- Carboy, 10 L PEHD (high-density polyethylene)
- Extension cable, digital, 1 m
- Rubber sealing plug
- Relay voltage barrier for sc100
- 1/8 in. NPT to tube fittings
- Tubing kit:
  - Pump tubing, high-flow, 1.52 mm, with tube fittings
  - Pump tubing, low-flow, 0.76 mm, with tube fittings
  - Tygon tubing, 1/16 in.
  - Fittings, 1/16 in. tube

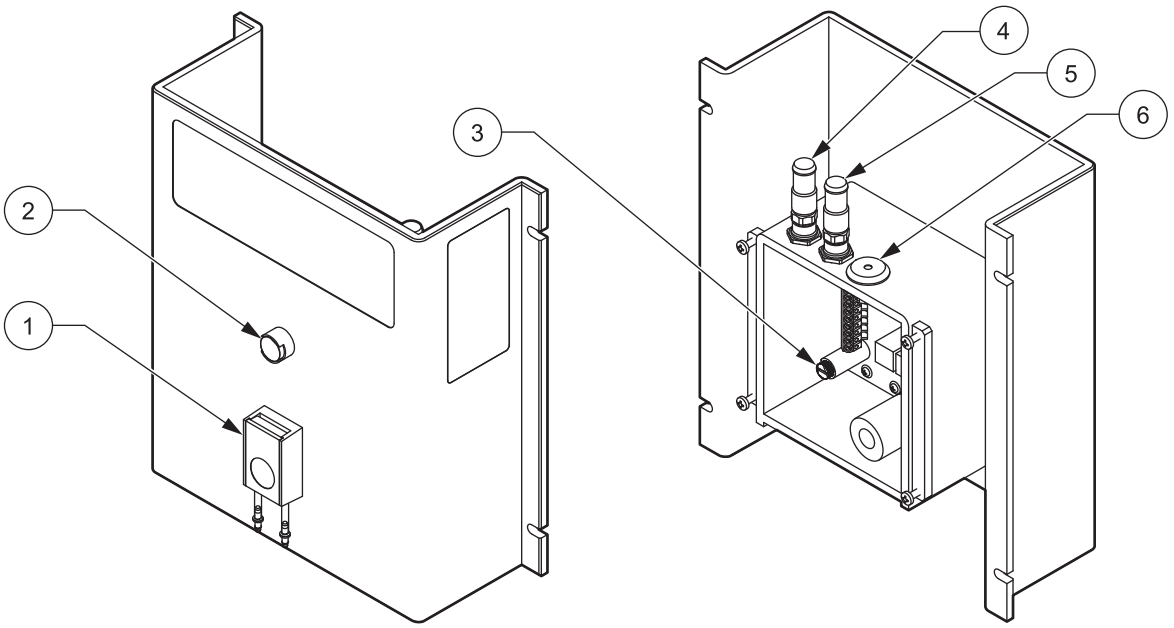

Figure 1 Acidification Unit Front and Back View

1	Pump, peristaltic	**4**	Quick connect cable fitting, female
2	On/off switch	**5**	Quick connect cable fitting, male
3	Fuse holder	**6**	Plug, rubber sealing

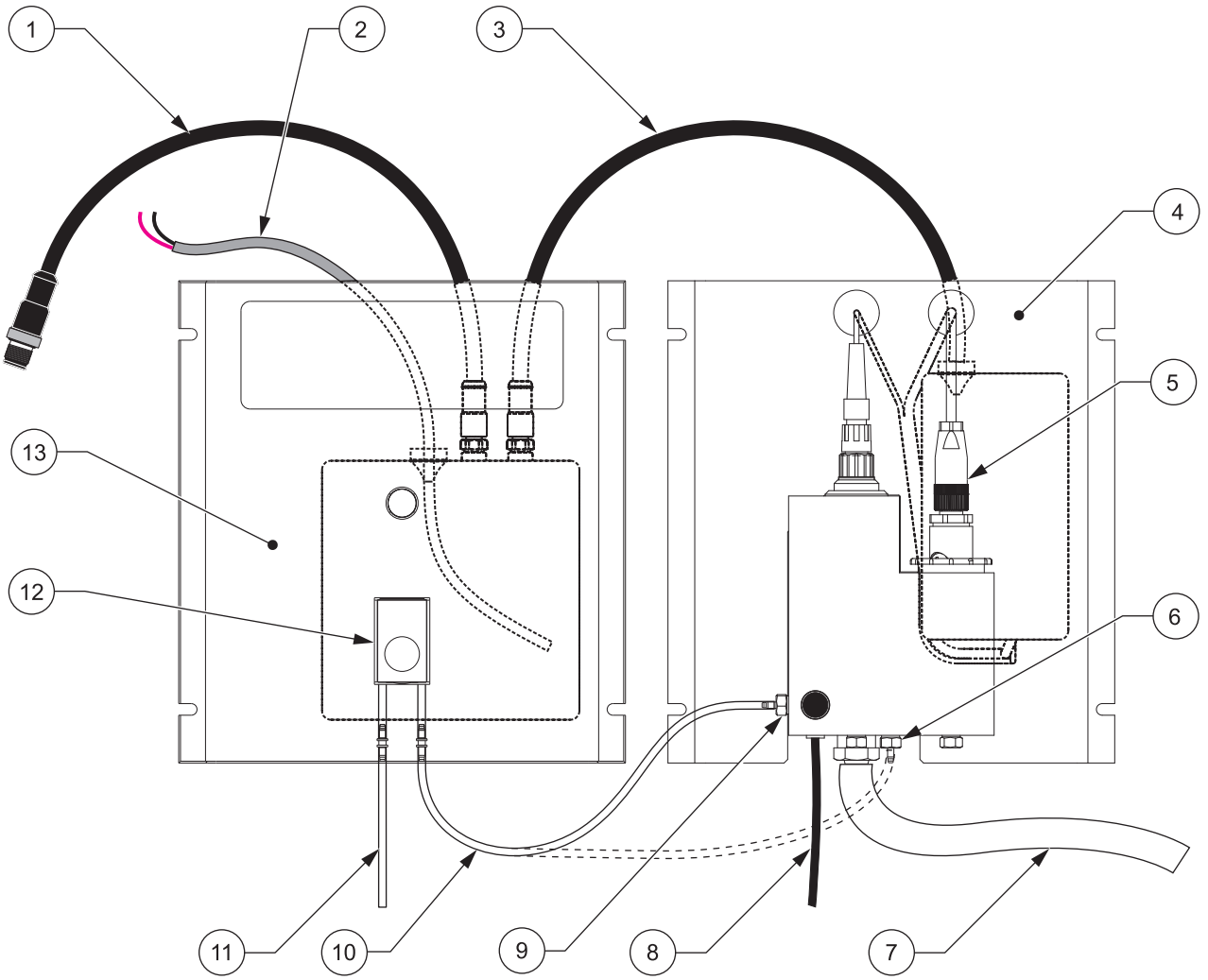

Figure 2 Typical Configuration with Sensor

1	Power cable, Acidification Unit to controller	**8**	Sample line
2	Relay cable, Acidification Unit to controller	**9**	Sensor port, side, 1/8 in. NPT
3	Extension cable, Acidification Unit to sensor	**10**	Tubing, Acidification Unit to sensor port
4	9180sc sensor panel	**11**	Tubing, carboy to Acidification Unit
5	9180sc sensor	**12**	Peristaltic pump
6	Sensor port, bottom, 1/8 in. NPT	**13**	Acidification Unit panel
7	Waste tube		

Installation

DANGER: This product IS NOT suitable for use in Hazardous Locations.

Mounting

Mount the Acidification Unit as close as possible to the 9180sc Sensor. The unit should be mounted on a vertical surface or Versa stand (Cat. No. 57432-00).

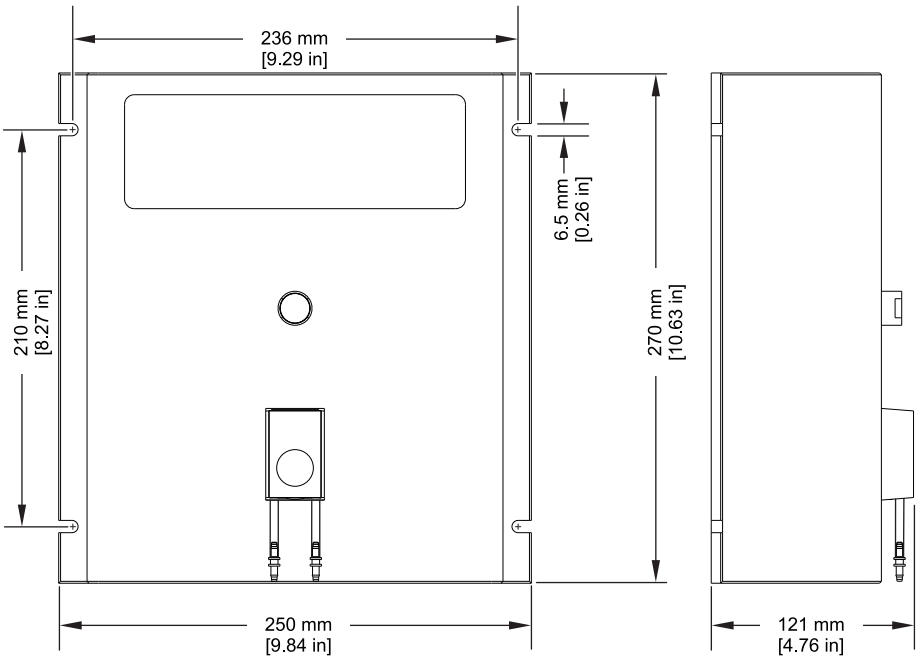

Figure 3 Mounting Dimensions

Tubing Connections

1. Stop the sample flow to the 9180sc Sensor.
2. Remove the 1/8 in. NPT plug from the port on the sensor block (see Figure 2 on page 3). Use the bottom sensor port for sample acidification with the HOCl sensor. Use the side sensor port for acidification with the 9184sc TFC sensor. Either port can be used for cleaning a sensor, but some acid will be lost to overflow if the side port is used.
3. Insert and tighten the 1/8 in. NPT to tube fitting into the sensor block. It is not necessary to use thread tape. Do not over tighten.
4. Lift the bottom of the pump cover on the front panel of the Acidification Unit and place the pump tubing into the pump. Insert the high-flow tubing for cleaning, or the low-flow tubing for acidification. Close the pump cover.
5. Connect a piece of 1/16 in. tubing to the outlet (right) pump fitting. Connect the other end of the tube to the fitting on the sensor block. Push to tighten (see Figure 2 on page 3).
6. Connect a piece of 1/16 in. tubing to the inlet (left) pump fitting and push to tighten. Place the other end of the tube in the bottom of the carboy.

Power Connection for Acidification Unit

1. Disconnect power to the controller.

2. Disconnect the power cable from the sensor junction box and attach the cable to the quick connect fitting on the Acidification Unit (see Figure 2 on page 3).

3. Attach the extension cable to the quick connect fitting on the Acidification Unit and to the sensor (Figure 2 on page 3).

Using the Controller Relay for Setting Cleaning Intervals

Connect the Acidification Unit to the controller relays when using the unit for cleaning at regular intervals. For the sc100 controller, a relay barrier (6149600) must be installed in the sc100 controller to protect the Acidification Unit from high voltage. The relay connector accepts 18–12 AWG wire. Wire gauge less than 18 AWG is not recommended.

Installing the Relay Cable in the Acidification Unit

1. Loosen the screws on the Acidification Unit junction box and remove the cover.

2. Remove the bridge wire from the connector marked Relay (see Figure 4 on page 6).

3. Cut a small hole in the closed end of the rubber sealing plug. Push the relay cable through the sealing plug.

4. Strip the insulation on the cable back 1 inch. Strip ¼ inch of each individual wire end (see Figure 5 on page 6).

5. Insert the narrow end of the sealing plug into the junction box hole. Pull the small end of the plug until the plug is seated securely in the junction box.

6. Insert the wires into the relay connector and tighten (see Figure 4 on page 6). Gently pull on the wires to ensure good contact.

7. Replace the junction box cover and tighten the screws.

Installing the Relay Voltage Barrier in the sc100 Controller

WARNING: Electrocution Hazard. Do not connect the low voltage relay connection of the acidification panel to the relays of the mains powered sc200 controllers. Only connect the low voltage relay connection of the acidification panel to 24V sc200 controllers. Refer to the sc200 controller documentation.

A relay voltage barrier must be installed in the sc100 controller between the power and relay connectors to separate high voltage from the Acidification Unit. The sc1000 controller does not require the additional barrier.

Important Note: *Although AC powered (100-240 VAC) sc100 controller models specify "Relay" voltage connections between 100 and 240 VAC, low voltage wiring can be safely connected to the relay contacts when the relay voltage barrier is installed in the sc100 as shown in Figure 6 on page 7.*

1. Disconnect power to the sc100 controller.

2. Remove the screws from the controller cover and open the cover. Lift the release tab and remove the internal voltage cover from the controller.

3. Push the power cable around the support post (see Figure 6 on page 7).

4. Insert the relay barrier (item 3, Figure 6 on page 7) so that the hole in the barrier fits over the support post (item 4, Figure 6). Place the notched part of the barrier between the power and relay connectors (see Figure 6).

5. Connect the relay cable from the Acidification Unit to the normally open position in the controller as described in the sc100 User Manual.

6. Reinstall the voltage cover that was removed in step 2.

7. Close the controller cover and tighten the screws. Power can now be applied to the controller.

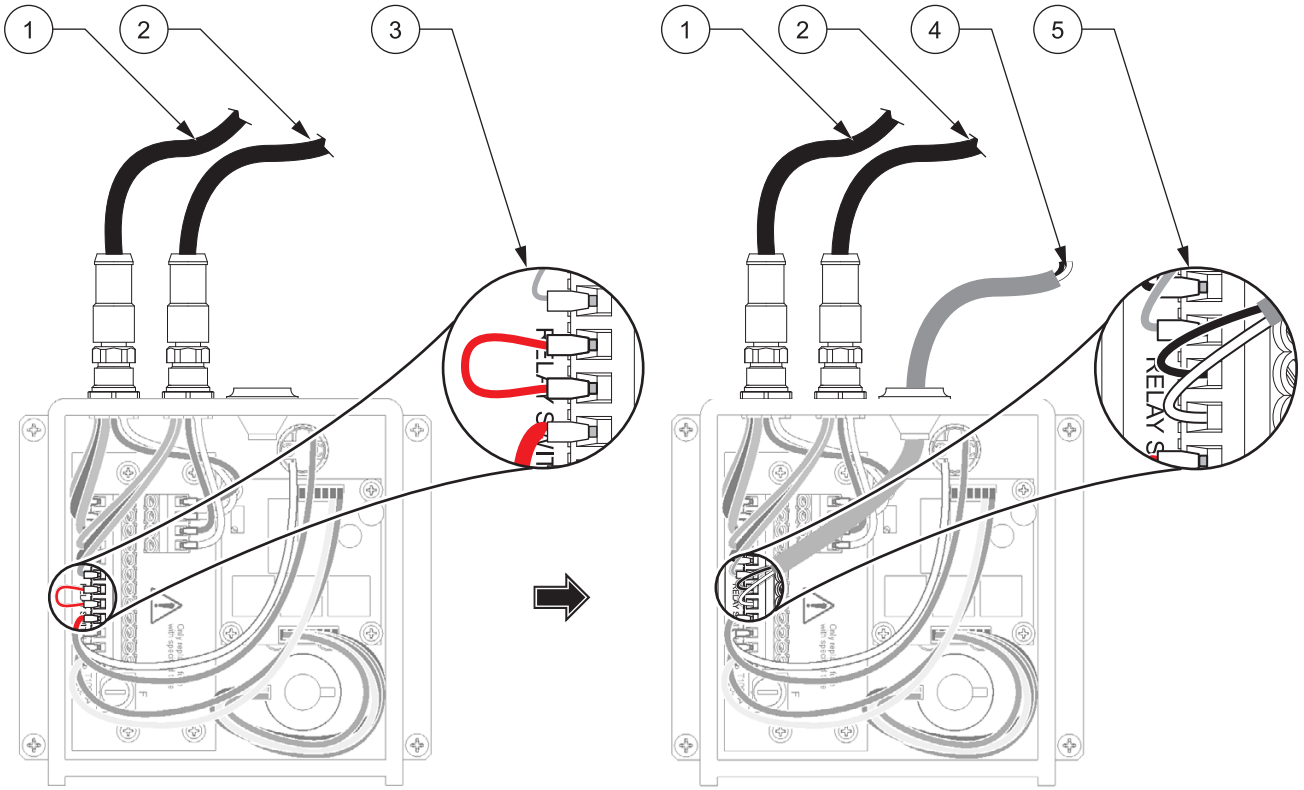

Figure 4 Installing the Relay Cable in the Acidification Unit

1	Power/extension cable	**4**	Relay cable to controller
2	Power/extension cable	**5**	Relay cable installed for cleaning interval
3	Relay bridge (remove for cleaning interval)		

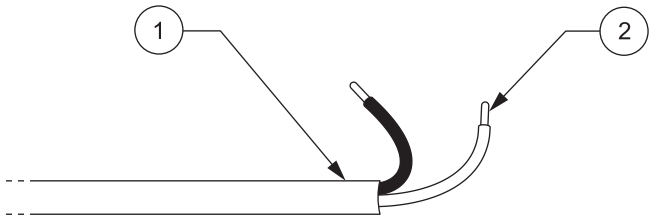

Figure 5 Relay Cable

1	Relay cable, stripped 1 inch	**2**	Relay wire, stripped ¼ inch

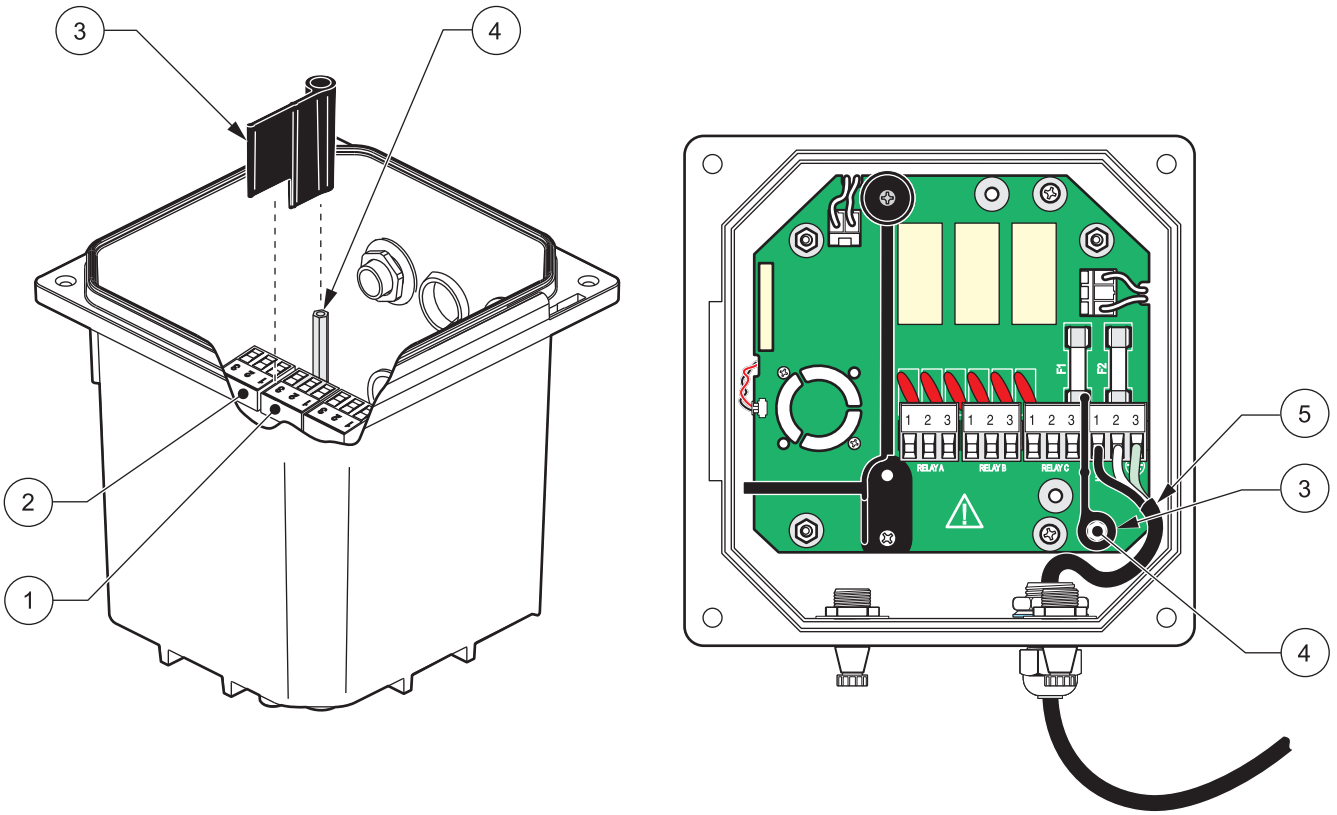

Figure 6 Installing the Relay Barrier - sc100 controller only

1	Relay C connector	**4**	Support post
2	Power connector	**5**	Power cable
3	Relay barrier		

Operation

Cleaning the Sensor

Place an acid such as household vinegar or 10% hydrochloric acid in the carboy to clean the sensor. Press the on/off switch to turn the Acidification Unit pump on. To clean the sensor at specified intervals, connect the unit to the controller relay and set the interval using the Timer-Based Relay option in the sc100 or sc1000 software menu, as described in the sc100 or sc1000 User Manual (Cat. No. 58600-18 or DOC023.54.03260). The minimum and maximum interval is determined by the controller software.

Acidifying the Sample

An acid such as household vinegar or 10% hydrochloric acid can be used to acidify the sample, or for more stability use a sulfuric acid/acetate buffer solution as described below. Press the on/off switch to turn the Acidification Unit on. Keep the Acidification Unit on to maintain a stable sensor response. One liter of acid solution will be consumed in approximately 3 days.

Note: *The relay bridge wire must be in place for continuous use (Figure 4 on page 6).*

Acidify samples to a pH between 5 and 6.5. The TFC analyzer will monitor the pH when the acid solution is injected at the side sensor port. If using the HOCl chlorine sensor, monitor the pH of acidified samples from the waste line. If the pH is below 5, dilute the acid with distilled or deionized water until the effluent pH is between 5 and 6.5. When using the sulfuric acid/acetate buffer, dilute the sample 2-fold to decrease the pH by 0.3, 3-fold to decrease the pH by 0.5, or 10-fold to decrease the pH by 1.0.

Preparing a Sulfuric Acid/Acetate Buffer Solution

DANGER: Wear protective eye glasses and clothing. Strong acids such as sulfuric and acetic acids can cause burns or permanent eye damage if splashed on the skin or in the eyes.

A sulfuric acid/acetate buffer solution can be prepared as follows:

1. Slowly add the following components to 500 mL distilled or deionized water while mixing in a 1-liter or larger container:
   - 100 mL Sulfuric acid (concentrated)
   - 82 g Sodium acetate
   - 60 mL Acetic acid
2. Dilute to 1 liter total volume with distilled or deionized water and mix well.

Note: *To prepare more than one liter of acid solution, multiply each component by the number of liters to prepare. For example, to prepare 10 liters of solution, begin with 5 liters of distilled water, add 1 liter of sulfuric acid, 820 g or sodium acetate, and 600 mL of acetic acid, then dilute to 10 liters total solution.*

Tubing Replacement

Install new tubing when the tubing becomes worn or when switching between acidification and cleaning.

1. Press the on/off switch to turn the Acidification Unit off.
2. Lift the bottom of the pump cover and remove the pump tubing.
3. Place a new piece of pump tubing into the pump. Insert the high-flow tubing for cleaning, or the low-flow tubing for acidification. Press the fittings into the pump housing. Close the pump cover.
4. Replace the tubing between the pump and carboy and between the pump and sensor using $^{1}/_{16}$-in. diameter tubing.

Fuse Replacement

Failed fuses are an indication that an equipment problem could exist. Problem resolution and fuse replacement should be performed only by qualified service personnel.

1. Disconnect power to the sc controller.
2. Disconnect power to the Acidification Unit by removing the power cable from the controller.
3. Remove the mounting screws and Acidification Unit panel from the wall.
4. Loosen the screws on the junction box and remove the cover.
5. Unscrew the fuse holder cover (see Figure 1 on page 2) and remove the fuse. Insert a new fuse of the same type and rating:
   - T, 250 mA, 250V
6. Replace the fuse holder cover by pushing and turning to secure.

7. Replace the junction box cover and tighten the screws. Do not overtighten. Remount the Acidification Unit panel on the wall.

8. Connect the extension cable to the controller. Reconnect power to the sc controller.

Specifications

Specifications are subject to change without notice.

Enclosure	IP65
Installation Category	Voltage 12 VDC
Power Consumption	0.5 W
Pump	12 VDC, 0.5 W brushless peristaltic pump
Pump rate, high-flow	0.81 mL/min
Pump rate, low-flow	0.24 mL/min

Parts and Accessories

Description	Catalog Number
Digital Extension Cable, 1 m (3.2 ft)	61224-00
Digital Extension Cable, 7.6 m (25 ft)	57960-00
Digital Extension Cable, 15.2 m (50 ft)	57961-00
Digital Extension Cable, 30.5 m (100 ft)	57962-00
Fuse, T, 250 mA, 250V	295=100=252
Relay voltage barrier for use in sc100	61496-00
Tubing Replacement Kit, includes: • Pump tubing, high-flow, 1.52 mm, with tube fittings (1 each) • Pump tubing, low-flow, 0.76 mm, with tube fittings (2 each) • Tygon tubing, 1/16 in. (2 m) • Fittings, 1/16 in. tube (4 each)	LZY300

HACH COMPANY World Headquarters
P.O. Box 389, Loveland, CO 80539-0389 U.S.A.
Tel. (970) 669-3050
(800) 227-4224 (U.S.A. only)
Fax (970) 669-2932
orders@hach.com
www.hach.com

HACH LANGE GMBH
Willstätterstraße 11
D-40549 Düsseldorf, Germany
Tel. +49 (0) 2 11 52 88-320
Fax +49 (0) 2 11 52 88-210
info@hach-lange.de
www.hach-lange.de

HACH LANGE Sàrl
6, route de Compois
1222 Vésenaz
SWITZERLAND
Tel. +41 22 594 6400
Fax +41 22 594 6499



© Hach Company, 2005, 2014. All rights reserved. Printed in Switzerland.
5/2014, Edition 2