WITHOUT CLEANING UNIT

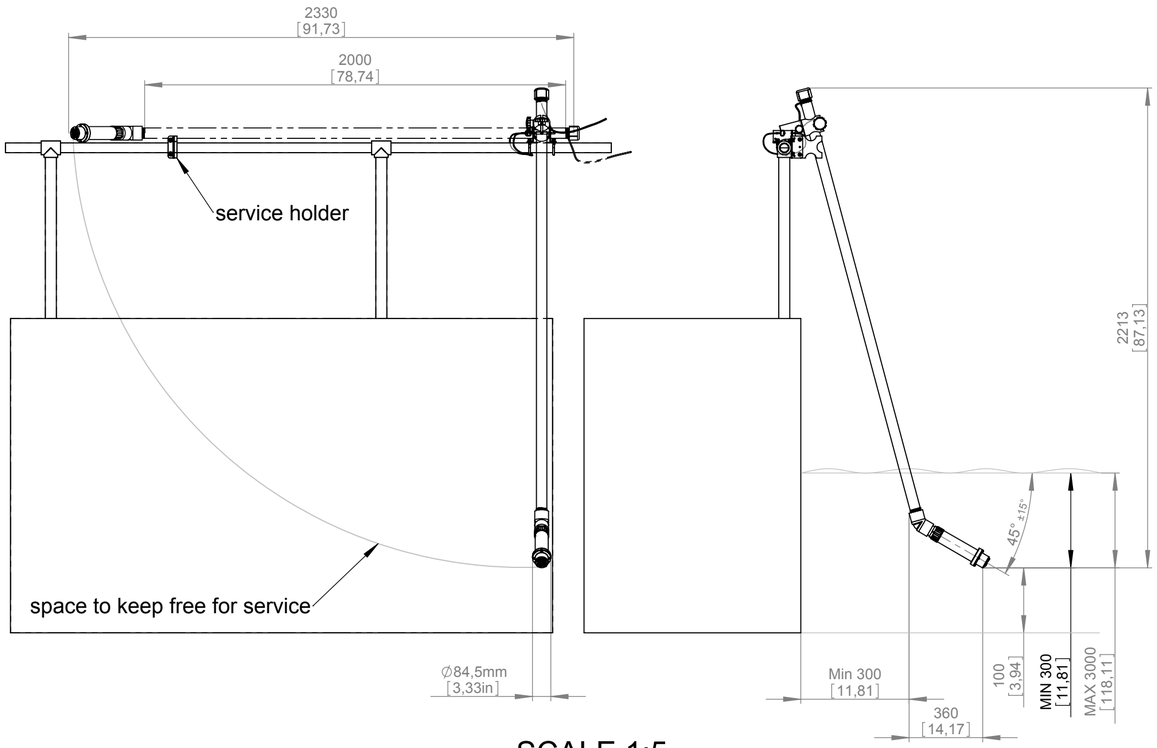

WITH CLEANING UNIT

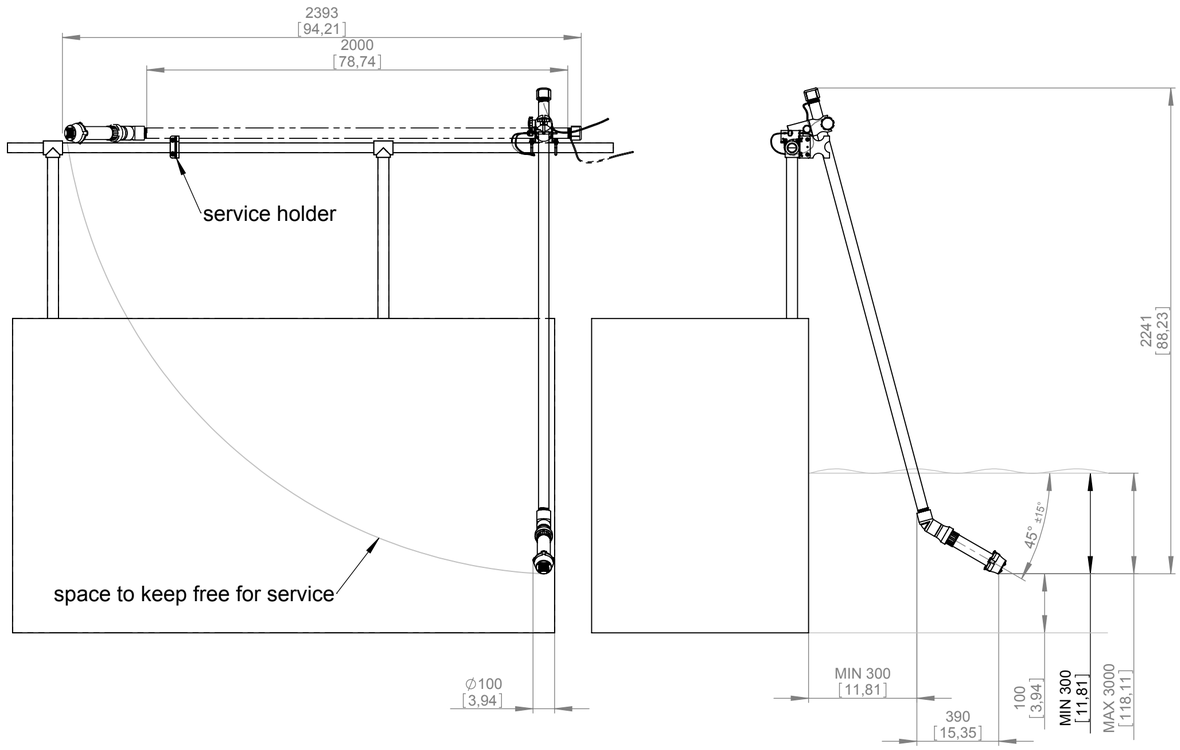

SCALE 1:5

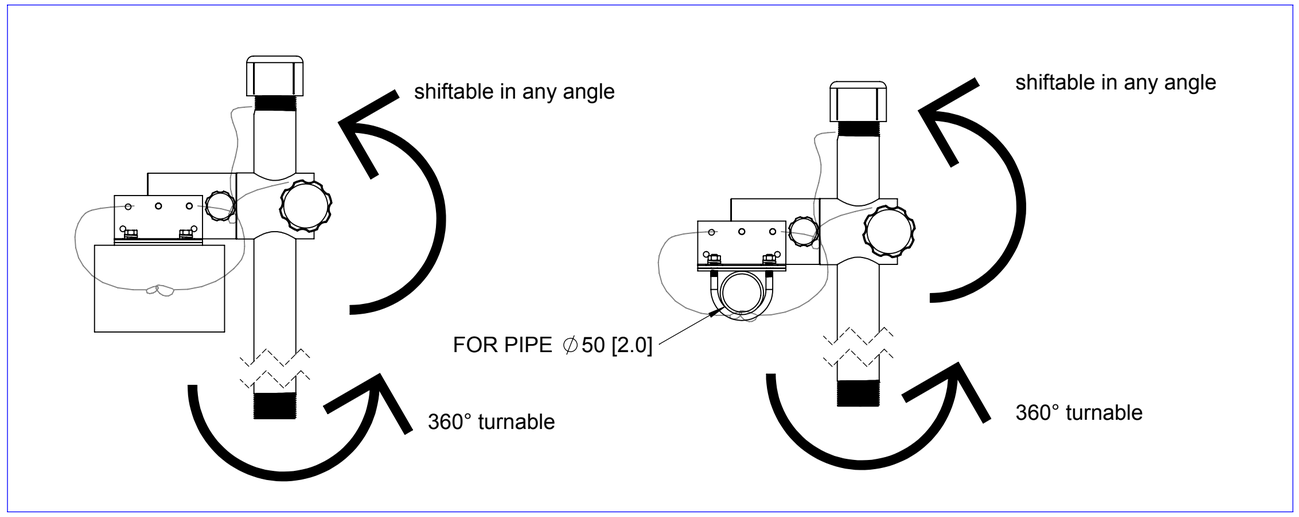

NOTES:
1. ENSURE THE SENSOR CANNOT MAKE CONTACT WITH THE TANK WALL.
2. INSTALL THE PROBE FACING (DOWNSTREAM) IN THE DIRECTION OF THE FLOW.
3. PROTECT THE PROBE AGAINST THE ONCOMING FLOW OF LARGE OBJECTS, SUCH AS BRANCHES OR ICE AND AGAINST FLOW SURGES.
4. MAX 3000 MM[118,11] IMMERSION DEPTH.
5. ENSURE 45° ± 15° ANGLE BETWEEN PROBE AND WATER SURFACE.
6. ENSURE THAT THE SENSOR IS FULLY IMMERSED.

NOTICE - LANGE Company claims proprietary rights in the information disclosed on this drawing. It is issued in confidence for engineering information only and may not in whole or a part, by reproduction or otherwise, be provided to others or used for purposes other than those for which it is furnished or otherwise made available to anyone without direct permission from LANGE Company.

Ohne unsere vorherige Zustimmung darf diese Unterlage weder vervielfältigt noch Dritten zugänglich gemacht werden, und es darf aus ihrem Inhalt weder selbst noch durch andere Weise mißbräuchlich verwertet werden.

Maße ohne Toleranzangaben General Tolerance	Maßeinheit/Dim.unit mm [inch]	Verwendung Application LXG437	Maßstab Scale 1:20
	Volumen/Volume	Werkstoff, Halbzeug: Material:	
Datum/Date	Name	Benennung / Designation	
Bearb./Dwn.		TRANSMITTAL AN-ISE sc	
Gepr./Chk.		Rail Mounting Kit (6184900)	
Rev.-Chk.			
HACH LANGE UNITED FOR WATER QUALITY		Zeichnungsnummer / Dwg.No.:	Blatt/Sheet 1
		v-ct. 1	Bl. Sht.
		Ers. für	Ausgabe
		Größe Size	A2

Zust./Rev. | Änderung / Rev.No. | Datum/Date | Name