Catalog Number 52010-18

PS1201 Power Supply Module

Instruction Manual

© Hach Company, 1997 – 1999, 2002. All rights are reserved. Printed in the U.S.A.

dd/dp 5/02 2ed

CERTIFICATION

Hach Company certifies this instrument was thoroughly tested, inspected, and found to meet its published specifications when it was shipped from the factory.

The PS1201 Power Supply has been tested and is certified as indicated to the following instrumentation standards:

Product Safety:

ETL Listed to UL Standard 3101-1 (Listing # H0492805390).
ETL Certified to CSA Standard C22.2 No. 1010.1 (Certification # H0492805390).
Certified by Hach Company to EN 61010-1 (IEC 1010.1): supporting test records by Intertek Testing Services.

Immunity:

EN50082-2 (European Generic Immunity Standard) per 89/336/EEC EMC: supporting test records by Hach Company, certified compliance by Hach Company.

Required Standard(s) include:
EN 61000-4-2 “1995” (IEC 1000-4-2) Electrostatic Discharge
EN 61000-4-4 “1995” (IEC 1000-4-4) Electrical Fast Transients/Bursts
EN 61000-4-11 “1995” (IEC 1000-4-11) Voltage Dips, Interruptions and Variations
ENV 50140 “1993” (IEC 1000-4-3) Radiated RF Electro-magnetic Fields
ENV 50141 “1993” Conducted Disturbances Induced by RF Fields
ENV 50204 “1993”Radiated Electro-magnetic Field from Digital Telephones

Additional Standard/s include:
EN 61000-4-5 “1995” (IEC 1000-4-5) Surge (Light Industrial)

Emissions:

EN 50081-2 (Emissions) per 89/336/EEC EMC: supporting test records by Intellistor O.A.T.S., certified compliance by Hach Company.

Required Standard/s include:
EN 55011 (CISPR 11) Emissions, Class A Limits

Additional Standard/s include:
EN 61000-3-2 (IEC 1000-3-2) Harmonic Disturbances Caused by Electrical Equipment
EN 61000-3-3 (IEC 100-3-3) Voltage Fluctuation (Flicker) Disturbances Caused by Electrical Equipment.

Canadian Interference-Causing Equipment Regulation, ICES-003, Class A:

Supporting test records by Intellistor O.A.T.S., certified compliance by Hach Company.

This Class A digital apparatus meets all requirements of the Canadian Interference-causing Equipment Regulations.

Cet appareil numérique de la classe A respecte toutes les exigences du Règlement sur le matériel brouilleur du Canada.

FCC PART 15, CLASS "A" LIMITS:

Supporting test records by Intellistor O.A.T.S., certified compliance by Hach Company.

This device complies with Part 15 of the FCC Rules. Operation is subject to the following two conditions:

1. This device may not cause interference, and

2. This device must accept any interference received, including interference that may cause undesired operation.

Changes or modifications to this unit not expressly approved by the party responsible for compliance could void the user's authority to operate the equipment.

This equipment has been tested and found to comply with the limits for a Class A digital device, pursuant to Part 15 of the FCC Rules. These limits are designed to provide reasonable protection against harmful interference when the equipment is operated in a commercial environment. This equipment generates, uses, and can radiate radio frequency energy and, if not installed and used in accordance with the instruction manual, may cause harmful interference to radio communications. Operation of this equipment in a residential area is likely to cause harmful interference, in which case the user will be required to correct the interference at his own expense. The following techniques of reducing the interference problems are easily applied:

1. Disconnect the PS1201 Power Supply from its power source to verify that it is or is not the source of the interference.

2. If the AC power supply for the PS1201 Power Supply is connected into the same outlet as the device with which it is interfering, try another outlet.

3. Move the PS1201 Power Supply away from the device receiving the interference.

4. Reposition the receiving antenna for the device receiving the interference.

5. Try combinations of the above.

TABLE OF CONTENTS

CERTIFICATION 2
SAFETY PRECAUTIONS 5
SPECIFICATIONS 6

INSTALLATION 7

SECTION 1 INTRODUCTION 9
1.1 Unpacking the Power Supply 9
1.2 Module Description 9
1.3 Data Communication Capabilities 10
1.4 Operating Environment 10

SECTION 2 INSTALLING THE POWER SUPPLY 11
2.1 Mounting the Power Supply 11
2.1.1 Pole Mounting 11
2.1.2 Wall Mounting 12
2.1.3 Panel Mounting 13
2.2 1720D Connections to Power Supply 15
2.3 1720D/L Connections to Power Supply 16
2.4 AquaTrend®, AquaTrend with SOM, and SOM to Power Supply Connections 18
2.5 SIO to PS1201 Power Supply Connections 20
2.6 Network/Device Interconnect Between Two Power Supplies 22
2.7 AC Input Power 24
2.7.1 Wiring Specifics 27
2.7.2 Connecting AC Power to the PS1201 Power Supply 27

SECTION 3 MAINTENANCE 29
3.1 Power Supply Cleaning Requirements 29
3.1.1 Cleaning the Enclosure 29
3.1.2 Cleaning the Heat Sink 29
3.2 Fuse Replacement 29
3.3 Fan Check 30

SECTION 4 TROUBLESHOOTING 31

GENERAL INFORMATION 33
REPLACEMENT PARTS 35
HOW TO ORDER 36
REPAIR SERVICE 37
WARRANTY 38

INDEX 39

SAFETY PRECAUTIONS

Please read this entire manual before unpacking, setting up, or operating this instrument. Pay particular attention to all danger and caution statements. Failure to do so could result in serious injury to the operator or damage to the equipment.

To ensure the protection provided by this equipment is not impaired, do not use or install this equipment in any manner other than that which is specified in this manual.

Use of Hazard Information

If multiple hazards exist, this manual will use the signal word (Danger, Caution, Note) corresponding to the greatest hazard.

DANGER
Indicates a potentially or imminently hazardous situation which, if not avoided, could result in death or serious injury.

CAUTION
Indicates a potentially hazardous situation that may result in minor or moderate injury.

NOTE
Information that requires special emphasis.

Precautionary Labels

Read all labels and tags attached to the instrument. Personal injury or damage to the instrument could occur if not observed.


This symbol, if noted on the instrument, references the instruction manual for operation and/or safety information.


This symbol, if noted on the product, indicates the need for protective eye wear.


Section 2.4 AquaTrend®, AquaTrend with SOM, and SOM to Power Supply Connections


Section 2.5 SIO to PS1201 Power Supply Connections


Section 2.6 Network/Device Interconnect Between Two Power Supplies


Section 2.7 AC Input Power


Section 2.7.1 Wiring Specifics


Section 2.7.2 Connecting AC Power to the PS1201 Power Supply


Section 3.2 Fuse Replacement

SPECIFICATIONS

Power Requirement: 95 to 240 VAC; 50 to 60 Hz; 60 VA max.

Operating Humidity Range: 0 to 95%, non-condensing

Storage Temperature: -20 to 60 °C

Operating Temperature: 0 to 40 °C

Output Power at 40 °C ambient: 25 watts max

Case 1—1720D being powered:
+5.25 VDC ±1% @2.3A max and 12 VDC ±10% @ 1A max

Case 2— no 1720D: 5.25 VDC ±1% @ 0A max
and 12 VDC ±10% @ 2A max

Enclosure: NEMA 4X (indoor) and IEC529 I.P. 66

Dimensions: 9 x 9 x 7 inches (22.9 x 22.9 x 17.8 cm)

Shipping Weight: 3 lb. 10 oz. (1.64 kg)

INSTALLATION

DANGER

Handling chemical samples, standards, and reagents can be dangerous. Review the necessary Material Safety Data Sheets and become familiar with all safety procedures before handling any chemicals.

DANGER

La manipulation des échantillons chimiques, étalons et réactifs peut être dangereuse. Lire les Fiches de Données de Sécurité des Produits (FDSP) et se familiariser avec toutes les procédures de sécurité avant de manipuler tous les produits chimiques.

PELIGRO

La manipulación de muestras químicas, estándares y reactivos puede ser peligrosa. Revise las fichas de seguridad de materiales y familiarícese con los procedimientos de seguridad antes de manipular productos químicos.

GEFAHR

Das Arbeiten mit chemischen Proben, Standards und Reagenzien ist mit Gefahren verbunden. Es wird dem Benutzer dieser Produkte empfohlen, sich vor der Arbeit mit sicheren Verfahrensweisen und dem richtigen Gebrauch der Chemikalien vertraut zu machen und alle entsprechenden Materialsicherheitsdatenblätter aufmerksam zu lesen.

PERIGO

A manipulação de amostras, padrões e reagentes químicos pode ser perigosa. Reveja a folha dos dados de segurança do material e familiarize-se com todos os procedimentos de segurança antes de manipular quaisquer produtos químicos.

SECTION 1 INTRODUCTION

1.1 Unpacking the Power Supply

Remove the following items from the shipping container and inspect each for damage.

- PS1201 Power Supply Module with Mounting Bracket

If any item is missing or damaged, please contact the Hach Customer Service Department in Loveland, Colorado. Do not return any item without prior authorization. In the United States, call 1-800-227-4224. Outside the United States, contact your nearest Hach dealer.

1.2 Module Description

The PS1201 power supply provides power for a variety of instrument and networking configurations. The power supply module uses AC power as its input, and is capable of operating multiple devices. Total PS1201 output power at 40 °C = 25 watts. The total wattage for multiple device operation may not exceed 25 watts and the distance between the power supply and the farthest device can be no more than 30 m (100 feet). Refer to *Table 1* for device wattages. Additional power supply units may be added to the system to support power requirements in excess of 25 watts or device distances exceeding 30 m (100 feet).

To compute how many other devices can run off one PS1201, add wattages and ensure the total does not exceed available power for Case 1 or Case 2 below:

Case 1: 1720D Being Powered	Case 2: No 1720D Being Powered
5.25V × 2.3A = 12.075 W 12V × 1A = 12 W 12 watts available for other devices*	5.25V × 0A = 0 W 12V × 2A = 24 W 24 watts available for other devices

* The portable AquaTrend® interface must be included in all Case 1 calculations since it may be plugged in at any time.

Table 1 Other Device Power Requirements*

Device	Power Requirement (watts)
AquaTrend	2
AquaTrend with Integrated SOM	5
Portable AquaTrend Module	2
Digital Display Module (DDM)	2
Repeater Board	0.75
Signal Input Module (SIM)	2
Signal Output Module (SOM)	3
1720D Turbidimeter **	12
Serial Input/Output Module (SIO Module)	Provides its own AC (wall plug) power supply.

* Cable Length from the PS1201 to other devices should not exceed 100 feet.
** Only one 1720D is allowed per PS1201 Power Supply Module.

1.3 Data Communication Capabilities

Echelon® fieldbus compatible; utilizes LonTalk® protocol. Maximum of 400 meters between devices with a 500 meter maximum per segment; distances in excess of 500 meters require a repeater. Up to 3 repeaters can be used for a total network length of 2000 meters.

1.4 Operating Environment

The PS1201 Power Supply was designed for indoor installation and requires an operating environment that maintains 0 to 40 °C, and 0 to 95% relative humidity, non-condensing.

SECTION 2 INSTALLING THE POWER SUPPLY

2.1 Mounting the Power Supply

The PS1201 Power Supply was designed to mount easily to a wall, pole, or panel. Allow at least one inch clearance from other objects on the top and sides and a minimum of six inches on the bottom. Disassembly is not required for pole or wall mounting, and minimal disassembly is required for panel mounting.

Note: *To maintain the integrity of the power supply NEMA enclosure, seal empty knockouts or through holes using the supplied strain relief and strain relief plug (Cat. No. 52149-00).*

A mounting bracket (see *Figure 2* on page 12) for securing the power supply to a horizontal or vertical pole (or similar structure) or to a wall is supplied. The bracket includes U-bolts which provide a channel for a ¾- to 2-inch pole (outside diameter). The pole must be capable of supporting at least five (5) pounds.

Make sure all necessary knockouts are removed before mounting the power supply.

2.1.1 Pole Mounting

1. Obtain two ¼-20 x 2.843 U-bolts and nuts.
2. Remove knockouts if necessary.
3. Press the back of the mounting bracket against a pole in the proper mounting position, either vertically or horizontally.
4. Place the curve of one U-bolt behind the pole, and insert the threaded ends of the bolt through two of the center holes on the mounting bracket. See *Figure 1*.
5. Secure the two nuts with a wrench, and repeat steps 2-4 on the opposite end of the bracket.

Figure 1 Pole Mounting

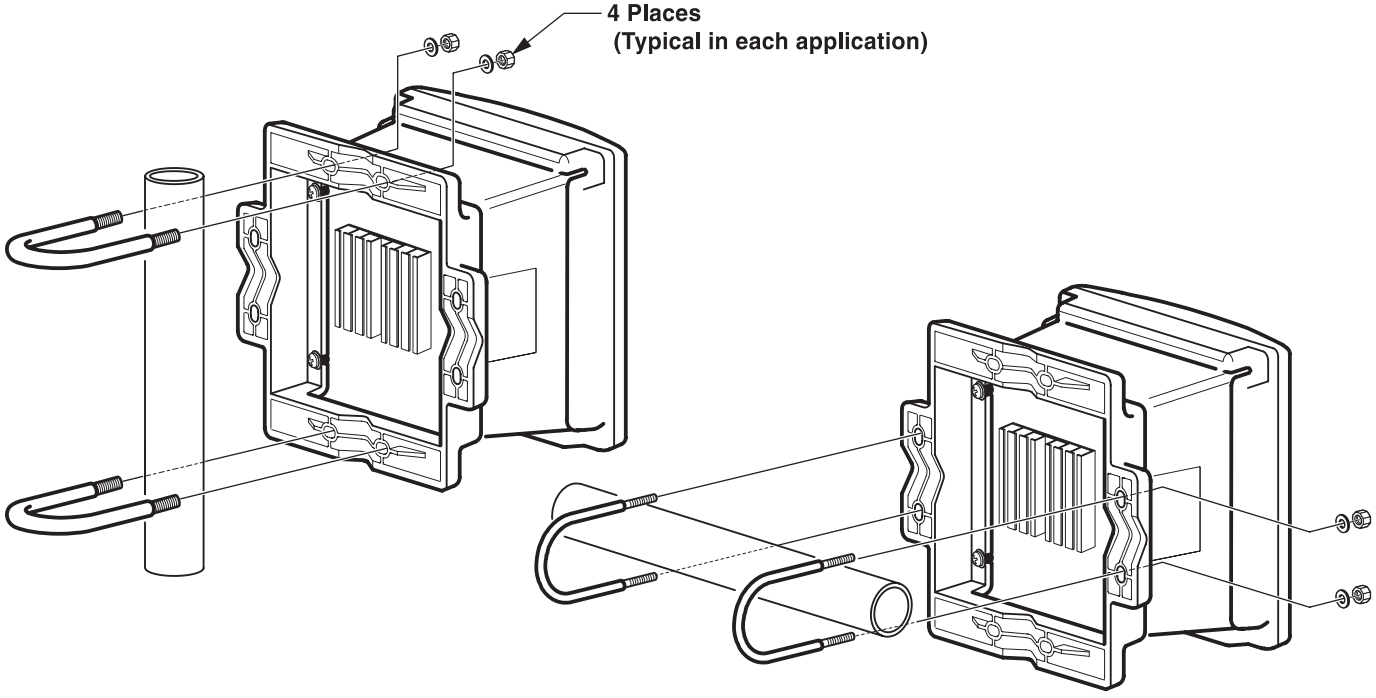

2.1.2 Wall Mounting

1. Remove knockouts if necessary.
2. Remove the mounting bracket from the back of the PS1201 Power Supply.
3. Use the bracket as a template to mark positions on the wall for four of the eight screw holes – either the vertical or horizontal pair (see *Figure 2*).
4. Reconnect the mounting bracket to the PS1201 Power Supply.
5. Drill pilot holes in the marked positions for four ¼-inch screws.
6. Use four ¼-inch, hex-head or pan-head screws to secure the bracket and PS1201 Power Supply to the wall.

Figure 2 Mounting Bracket Dimensions

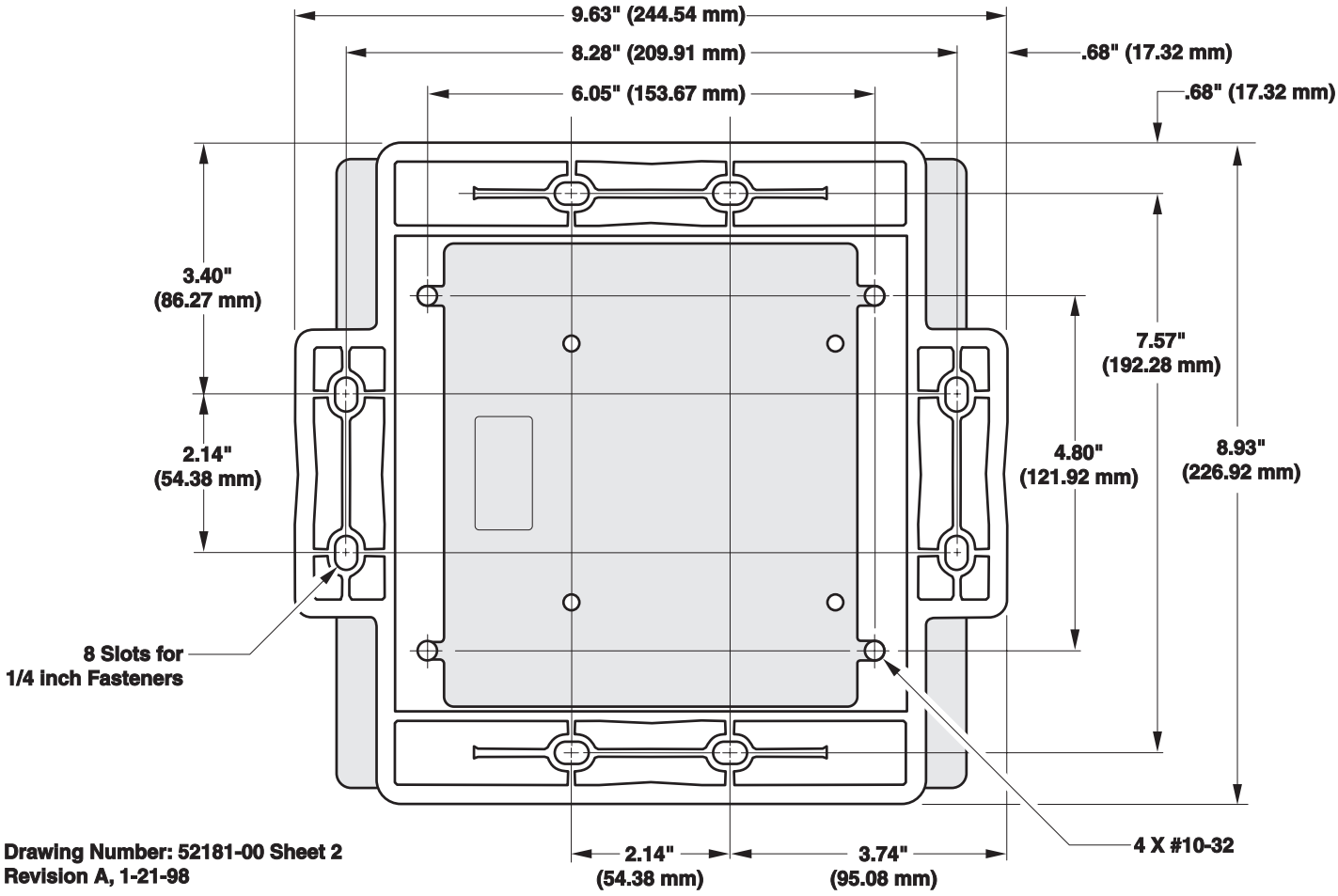

2.1.3 Panel Mounting

1. Remove knockouts if necessary.
2. Turn off all power to the PS1201 Power Supply and disconnect all cables if necessary.
3. Use a Phillips screwdriver to remove the four screws holding the mounting frame onto the back of the PS1201 Power Supply. The wall mount frame is not needed for panel mounting.
4. Use a flat-blade screwdriver to loosen the screws of the PS1201 face.
5. Lift the face off the PS1201 and set it aside. Or, store it by screwing the right side of the face to the left side of the back enclosure.
6. Use a punch and hammer to remove the three knockouts on the inside rim of the bottom enclosure.
7. Measure the panel hole the dimension information given in *Figure 4*. Mark the panel for placement of three #10 pan-head screws. Do not install a screw on the high-voltage side of the power supply.
8. Cut out the panel hole and drill three pilot holes for the screws.
9. Fit the PS1201 Power Supply into the panel hole and secure it with three #10 pan-head screws.
10. Make all wiring connections as described in the following sections.
11. Ensure that the gasket is properly seated in the PS1201 face and tighten the screws (10 in-lb (1.1 n-m) maximum). Do not overtighten the screws.

Figure 3 Power Supply Knock-outs with Conduit Fittings

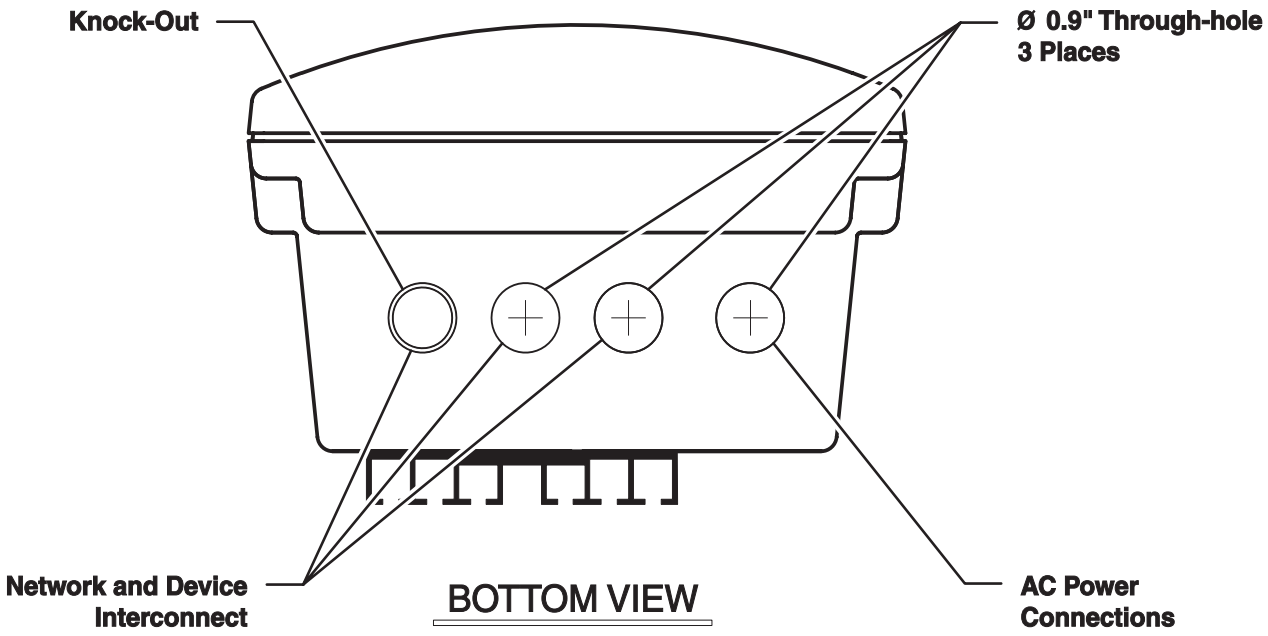

Figure 4 Panel Mount Dimensions

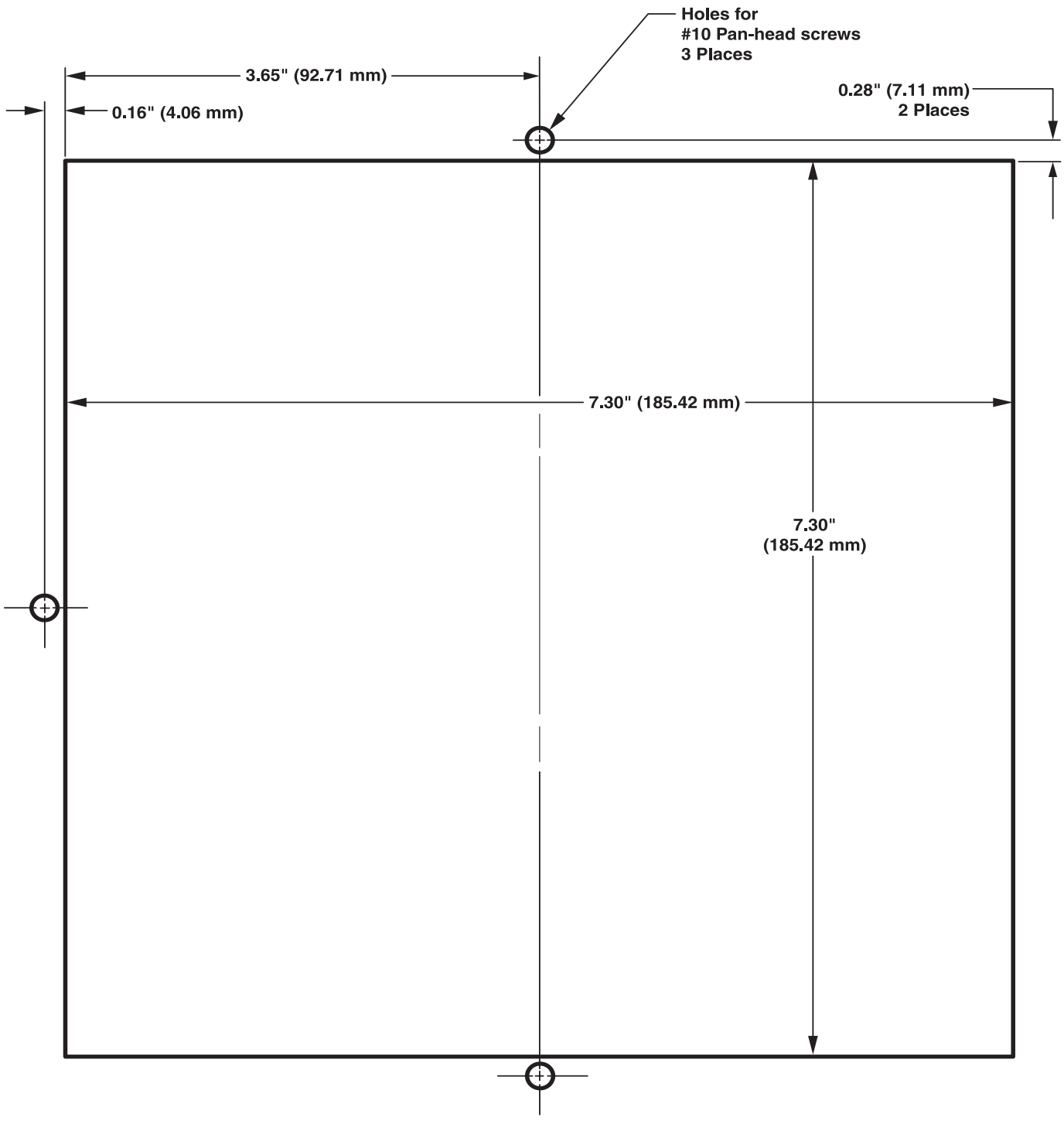

2.2 1720D Connections to Power Supply

Refer to the following figure and the instructions below:

Figure 5 1720D Connections to PS1201 Power Supply

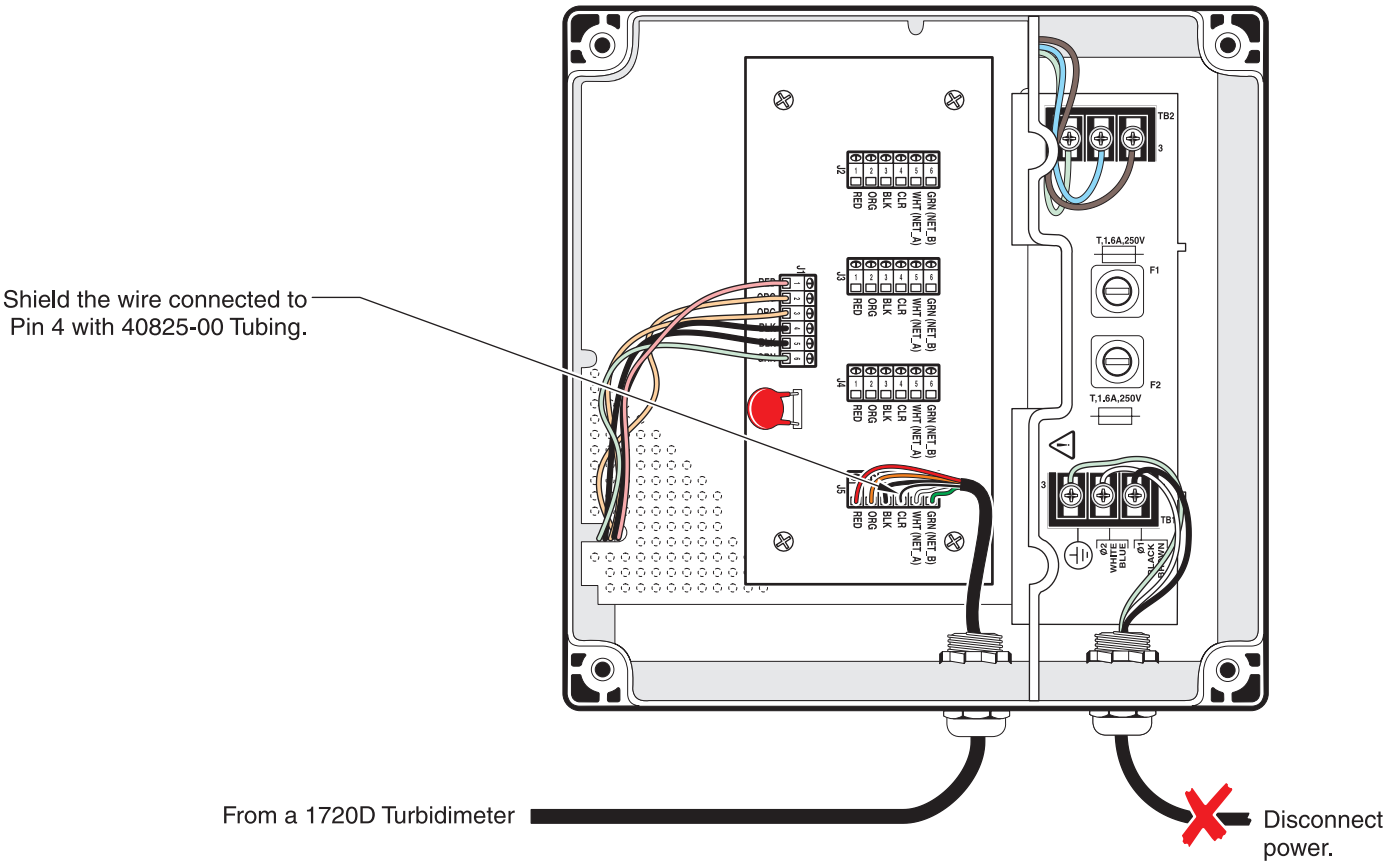

Note: *The cable is already wired to the turbidimeter head. Wire the unterminated end of the cable to the PS1201 Power Supply.*

1. Turn off all power to the PS1201 Power Supply and disconnect all cables if necessary.
2. Unscrew the four screws securing the PS1201 face using a flat-bladed screwdriver.
3. Lift the face off the PS1201 and set it aside. Or, store the front cover by screwing the right side of the front cover to the left side of the back enclosure.
4. If necessary, use a punch and hammer from the outside of the enclosure to remove one of the left three unused knockouts on the bottom of the Power Supply enclosure. Center the punch on the knock-out for best results.

Note: *To assure the PS1201 continues to meet NEMA 4X, I.P.66 enclosure ratings, use only the supplied NEMA-style enclosure strain relief fittings.*

5. Remove the washer from the strain relief on the cable attached to the turbidimeter head. Remove the fitting and route the cable through the hole created in step 4 and reinstall the nut.

6. Connect the cable wires to the six-position terminal block as follows:

Table 2 Power Supply Interconnect Wiring Information

Terminal Position	Wire Color
1	Red
2	Orange
3	Black
4	Shield (with Tubing, Cat. No. 40825-00)
5	White
6	Green

7. Tighten the strain relief fitting using the supplied locknut until the cable no longer slides in the strain relief.

8. **If other power or network connections are to be made at this time, refer to the appropriate section in this manual or the individual device manual.** If no other connections need to be made, continue with the remainder of this procedure.

9. Ensure that the gasket is properly seated in the PS1201 face and tighten the screws (10 in-lb (1.1 n-m) maximum). Do not overtighten the screws.

10. Restore power to the PS1201.

2.3 1720D/L Connections to Power Supply

Refer to the following figures and the instructions below:

Note: *The cable is already wired to the turbidimeter head. Wire the unterminated end of the cable to the PS1201 Power Supply.*

1. Turn off all power to the PS1201 Power Supply and disconnect all cables if necessary.

2. Unscrew the four screws securing the PS1201 face using a flat-bladed screwdriver.

3. Lift the face off the PS1201 and set it aside. Or, store the front cover by screwing the right side of the front cover to the left side of the back enclosure.

4. If necessary, use a punch and hammer from the outside of the enclosure to remove one of the left three unused knockouts on the bottom of the Power Supply enclosure. Center the punch on the knock-out for best results.

Note: *To assure the PS1201 continues to meet NEMA 4X, I.P.66 enclosure ratings, use only the supplied NEMA-style enclosure strain relief fittings.*

5. Remove the lock nut from the strain relief on the cable attached to the turbidimeter head. Remove the fitting and route the cable through the hole created in step 4 and reinstall the nut.

6. Connect the cable wires to the six-position terminal block as shown in *Table 3*.

Table 3 Power Supply Interconnect Wiring Information

Terminal Position	Wire Color
1	Red
2	No Connection
3	Black
4	Shield (with Tubing, Cat. No. 40825-00)
5	White
6	Green

7. Tighten the strain relief fitting using the supplied lock nut until the cable no longer slides in the strain relief.

8. **If other power or network connections are to be made at this time, refer to the appropriate section in this manual or the individual device manual.** If no other connections need to be made, continue with the remainder of this procedure.

9. Ensure that the gasket is properly seated in the PS1201 face and tighten the screws (10 in-lb (1.1 n-m) maximum). Do not overtighten the screws.

10. Restore power to the PS1201.

Figure 6 1720D/L Connections to PS1201 Power Supply

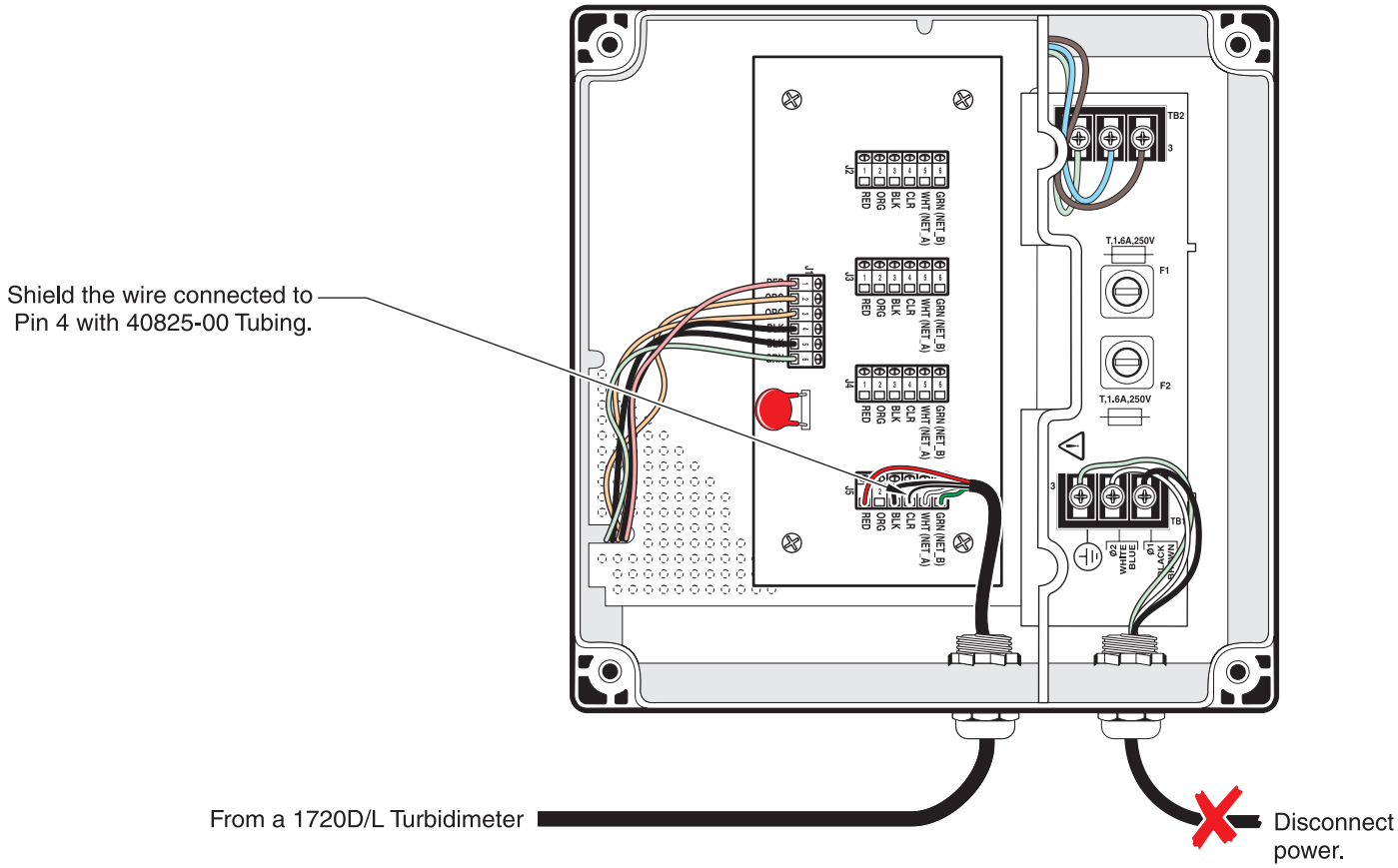

2.4 ⚠ AquaTrend®, AquaTrend with SOM, and SOM to Power Supply Connections

Order enough Cat. No. 52158-00 cable from Hach to suit the specific installation parameters. A Cable Termination Kit (Cat. No. 52156-00) is also required. Refer to *Figure 7*, *Figure 8*, and *Figure 9* and the instructions below.

Note: *The maximum cable length from the PS1201 to the most distant device is 100 ft. (30 m).*

1. Turn off all power to the PS1201 Power Supply.
2. Unscrew the four screws securing the PS1201 face using a flat-bladed screwdriver.

Figure 7 AquaTrend to PS1201 Power Supply Connections

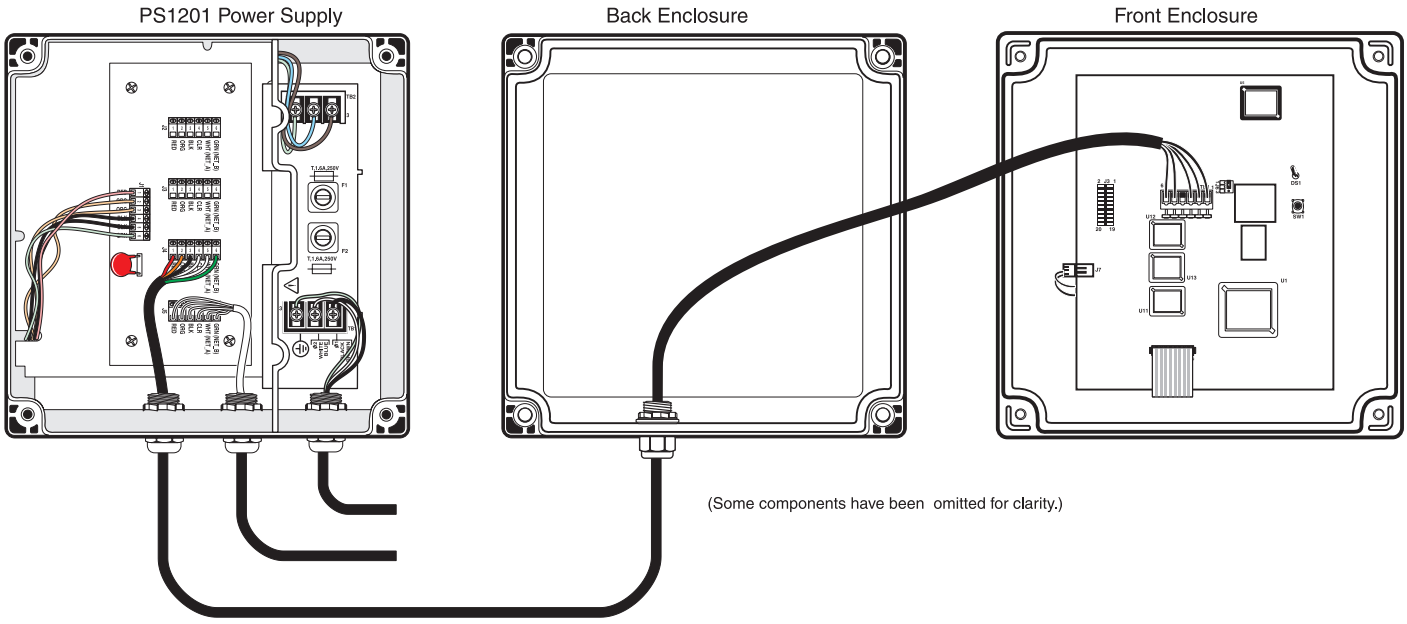

3. Lift the face off the Power Supply and set it aside. Or, store the front cover by screwing the right side of the front cover to the left side of the back enclosure.
4. If necessary, carefully use a punch and hammer from the outside of the enclosure to remove one of the left three unused knockouts on the bottom of the Power Supply enclosure.
5. Install the cable from the AquaTrend interface with the strain relief fitting provided in the hole described in step *4*, above. Make sure the outer cable insulation is just captured by the strain relief fitting.
6. Strip six (6) inches (15 cm) of outer insulation from the cable (Cat. No. 52158-00).
7. Strip 1/4 inch of insulation from each wire and insulate the shield wire with appropriate tubing (see table below for catalog number).
8. Connect the cable wires to the six-position terminal block as follows:

Table 4 Power Supply Interconnect Wiring Information

Terminal Position	Wire Color
1	Red
2	No Connection
3	Black
4	Shield (Insulate with Tubing, Cat. No. 40825-00)
5	White
6	Green

9. Tighten the strain relief fitting using the supplied locknut until the cable no longer slides in the strain relief.

Note: To ensure the PS1201 continues to meet NEMA 4X, I.P.66 enclosure ratings, use only the supplied NEMA-style enclosure strain relief fittings.

10. **If other power or network connections are to be made at this time, refer to the appropriate section in this manual or the individual device manual.** If no other connections need to be made, continue with the remainder of this procedure.

11. Ensure that the gasket is properly seated in the PS1201 face and tighten the screws (10 in-lb (1.1 n-m) maximum). Do not overtighten the screws.

12. Restore power to the PS1201.

Figure 8 AquaTrend with SOM to PS1201 Power Supply Connections

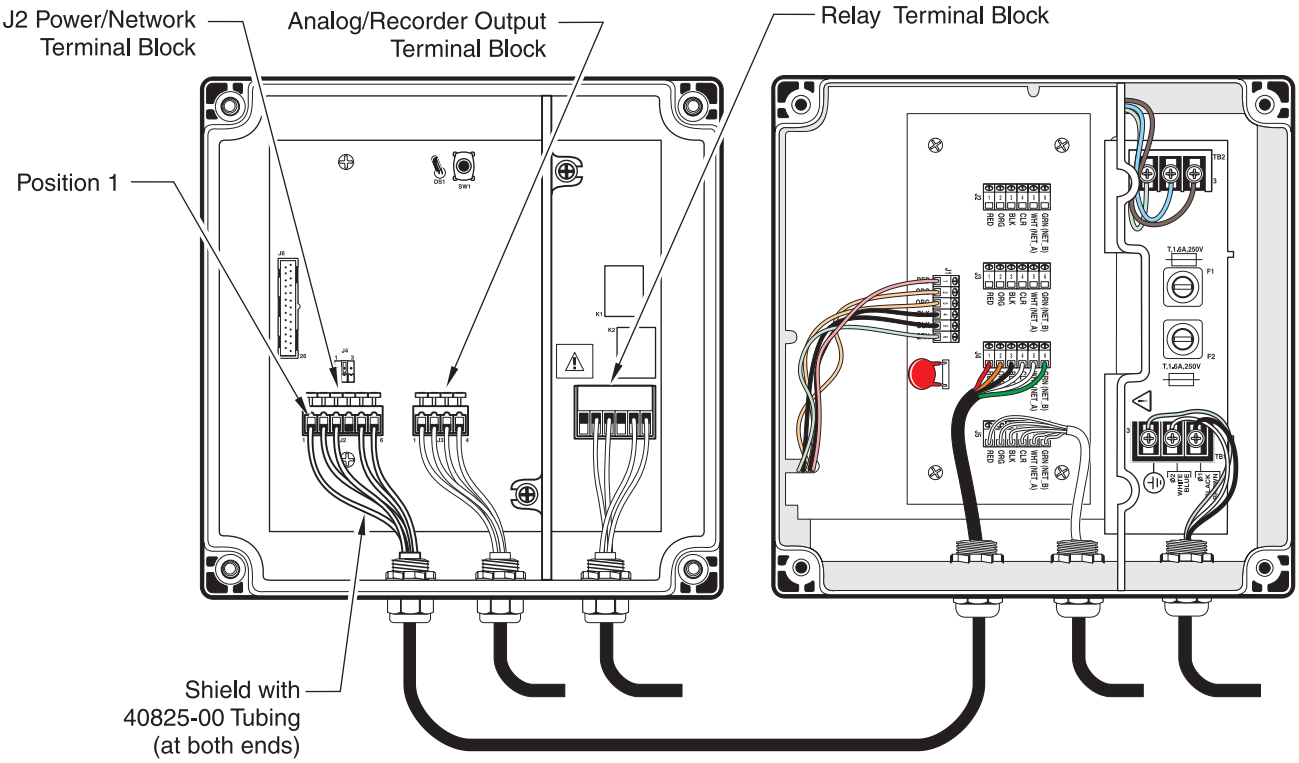

Figure 9 SOM to PS1201 Power Supply Connections

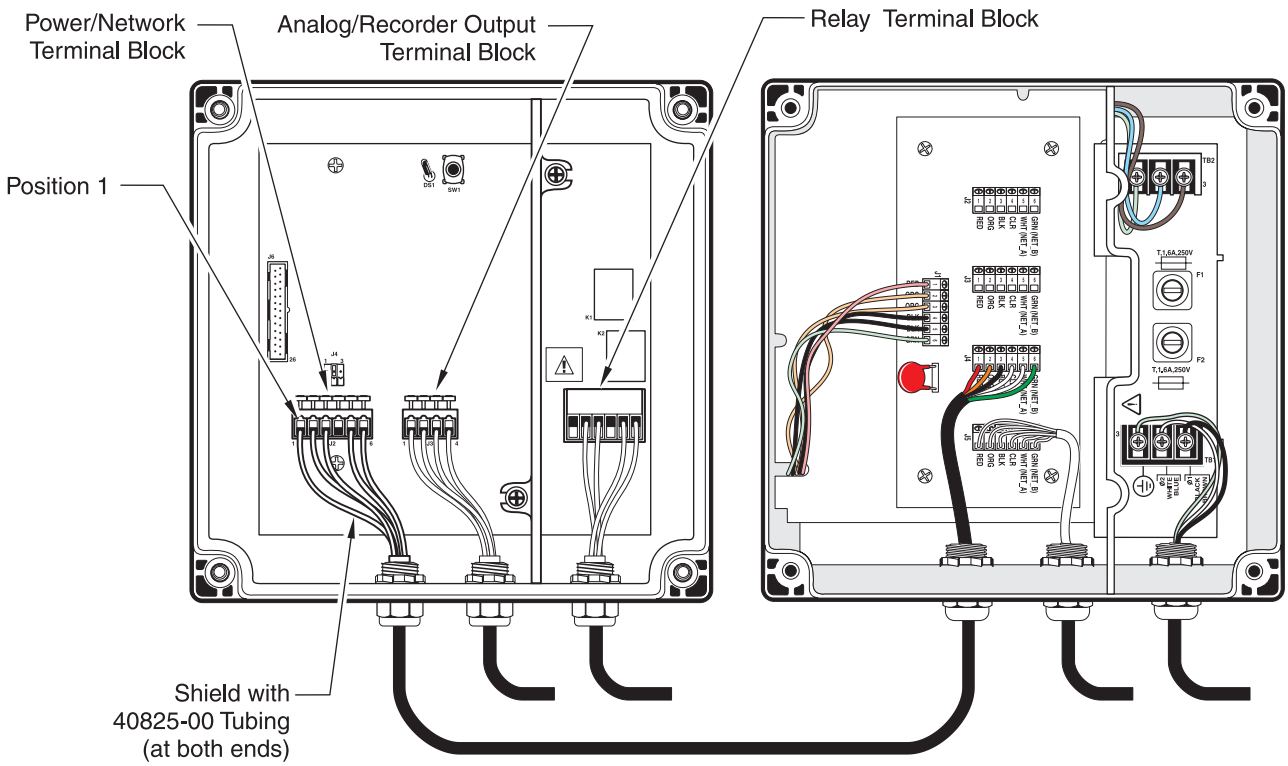

2.5 ⚠ SIO to PS1201 Power Supply Connections

The SIO module is powered by a 9V battery eliminator which is connected directly to AC power. The only connections made between the power supply and the SIO module are network connections. These network connections are made as follows:

DANGER
Facility power systems may have ground potentials developed if poor grounding techniques have been used. To reduce the chance of shock hazards, care must be taken when connecting equipment grounded at different locations. Follow the instructions given in this section carefully.

PERIGO
Os sistemas eléctricos de aparelhos podem densenvolver tensões de massa se forem utilizadas técnicas de ligação à terra fracas. Para reduzir a possibilidade de perigo de choques, há que ter cuidado em ligar o equipamento à terra em lugares diferentes. Siga escrupulosamente as instruções contidas neste manual.

PELIGRO
Si no se emplean técnicas adecuadas de conexión a tierra, los sistemas eléctricos de la instalación pueden generar tensiones de masa. Con el fin de disminuir el riesgo de descarga eléctrica, haga la conexión a tierra en lugares diferentes. Respecte las instrucciones que se indican en esta sección.

DANGER
Les installations électriques dans les usines développent des tensions de masse si de mauvaises techniques de mise à la terre sont utilisées. Pour réduire les risques d'électrocution, prendre des précautions pour le branchement d'équipements raccordés à la terre à des emplacements différents. Suivre attentivement les instructions données dans ce chapitre.

GEFAHR
Spannungsversorgungsanlagen führen evlt. Erdpotential, wenn eine schlechte Systemerdung vorgenommen wurde. Vosicht ist geboten, wenn das angeschlossene Gerät an verschiedenen Orten geerdet ist. Die Anweisungen in diesem Abschnitt sind genau zu befolgen.

1. Turn off all power to the PS1201 Power Supply.
2. Unscrew the four screws securing the PS1201 front face using a flat-bladed screwdriver.

__Note:__ To assure the PS1201 continues to meet NEMA 4X and I.P. 66 enclosure ratings, use only the supplied NEMA-style enclosure strain reliefs.

3. Lift the face off the power supply and set it aside. Or, store the front cover by screwing the right side of the front cover to the left side of the back enclosure.
4. If necessary, use a punch and hammer from the outside of the enclosure to remove one of the left three unused knockouts on the bottom of the PS1201 enclosure.
5. Using the required length of Cat. No. 52157-00 cable, route the SIO's network wires through the strain relief fitting provided and through the hole created in step 4. Make sure the outer cable insulation is just captured by the strain relief fitting.
6. Strip six (6) inches (15 cm) of outer insulation from the cable (Cat. No. 52157-00).
7. Strip 1/4 inch of insulation from each wire and insulate the shield wire with appropriate tubing (see table below for catalog number).
8. Refer to *Figure 10* and *Table 5* to connect the cable wires to the six-position terminal block.

Table 5 Power Supply Interconnect Wiring Information

Terminal Position	Wire Color
1	No Connection
2	No Connection
3	No Connection
4	Shield (Insulate with Tubing, Cat. No. 40825-00)
5	White
6	Green

9. Tighten the strain relief using the supplied locknut until the cable no longer slides in the strain relief fitting.

__Note:__ To assure the PS1201 continues to meet NEMA 4X, I.P.66 enclosure ratings, use only the supplied NEMA-style enclosure strain relief fittings.

10. **If other power or network connections are to be made at this time, refer to the appropriate section in this manual or the individual device manual.** If no other connections need to be made, continue with the remainder of this procedure.
11. Ensure that the gasket is properly seated in the PS1201 face and tighten the screws (10 in-lb (1.1 n-m) maximum).
12. Restore power to the PS1201.

Figure 10 SIO to PS1201 Power Supply Connections

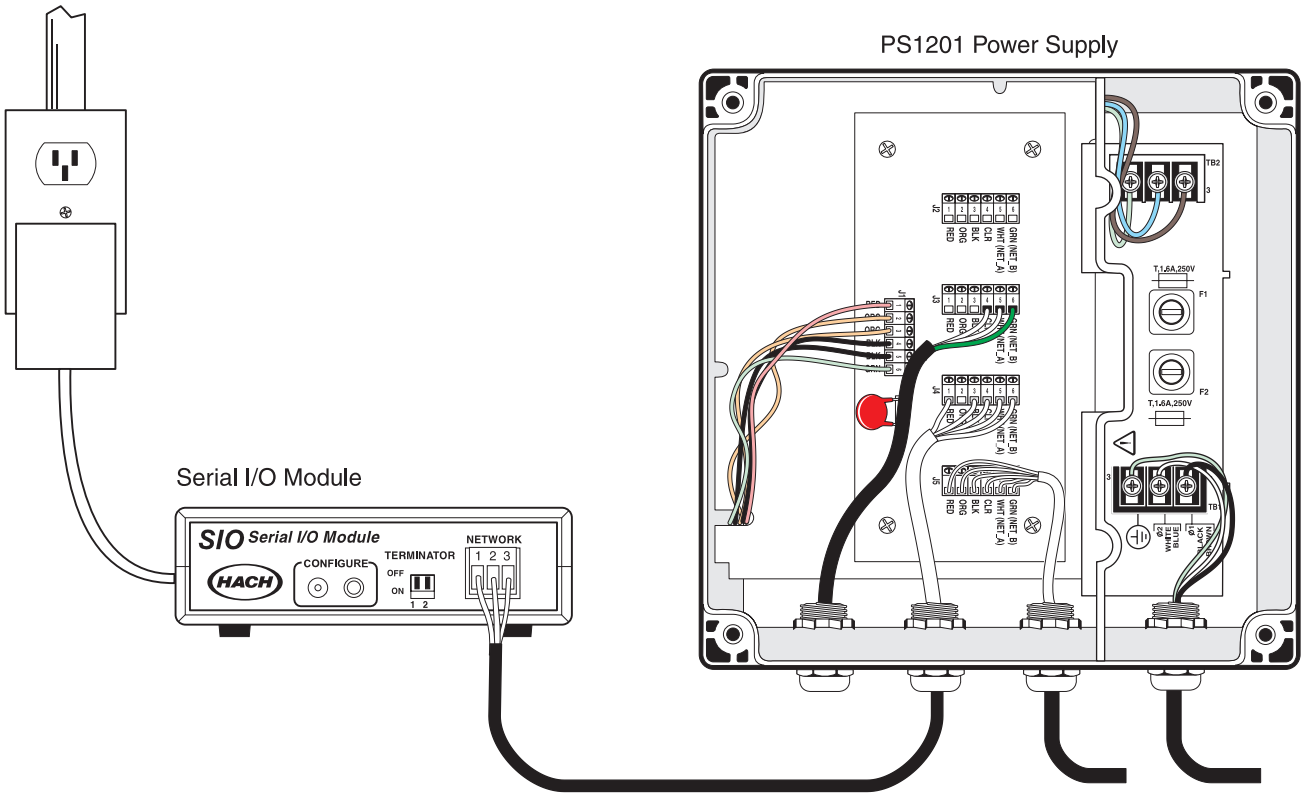

2.6 ⚠ Network/Device Interconnect Between Two Power Supplies

Devices are connected via a two conductor, shielded cable with a length less than 400 meters. Although these connections are usually made between two PS1201 Power Supplies, information for interconnecting between other modules is presented in the instrument manuals for those modules.

DANGER:
Facility power systems may have ground potentials developed if poor grounding techniques have been used. To reduce the chance of shock hazards, care must be taken when connecting equipment grounded at different locations. Follow the instructions given in this section carefully.

PERIGO
Os sistemas eléctricos de aparelhos podem densenvolver tensões de massa se forem utilizadas técnicas de ligação à terra fracas. Para reduzir a possibilidade de perigo de choques, há que ter cuidado em ligar o equipamento à terra em lugares diferentes. Siga escrupulosamente as instruções contidas neste manual.

PELIGRO
Si no se emplean técnicas adecuadas de conexión a tierra, los sistemas eléctricos de la instalación pueden generar tensiones de masa. Con el fin de disminuir el riesgo de descarga eléctrica, haga la conexión a tierra en lugares diferentes. Respecte las instrucciones que se indican en esta sección.

DANGER
Les installations électriques dans les usines développent des tensions de masse si de mauvaises techniques de mise à la terre sont utilisées. Pour réduire les risques d'électrocution, prendre des précautions pour le branchement d'équipements raccordés à la terre à des emplacements différents. Suivre attentivement les instructions données dans ce chapitre.

GEFAHR
Spannungsversorgungsanlagen führen evlt. Erdpotential, wenn eine schlechte Systemerdung vorgenommen wurde. Vosicht ist geboten, wenn das angeschlossene Gerät an verschiedenen Orten geerdet ist. Die Anweisungen in diesem Abschnitt sind genau zu befolgen.

For connections between two Power Supplies, refer to *Figure 11* and proceed as follows:

Note: *The steps that follow must be duplicated for each of the two power supplies. The only exception is the connection of the shield.*
The shield is connected at only one end.

1. Turn off all power to **both** PS1201 Power Supplies.
2. Unscrew the four screws securing each PS1201 face using a flat-bladed screwdriver.
3. Lift the face off each of the Power Supplies and set them aside. Or, store the front cover by screwing the right side of the front cover to the left side of the back enclosure.
4. If necessary, use a punch and hammer (from the outside of the enclosure) to remove one of the left three unused knockouts on the bottom of each Power Supply enclosure.
5. Route the interconnect cable (Cat. No. 52157-00) to each Power Supply enclosure through the holes created in step *4*, using the strain relief fittings provided. Make sure the outer cable insulation is just captured by the strain relief fitting.
6. Strip six (6) inches (15 cm) of outer insulation from the cable (Cat. No. 52158-00).
7. Strip 1/4 inch of insulation from each wire and insulate the shield wire with appropriate tubing (see table below for catalog number).

Note: *Connect shield only at one end of cable (choose either end). Insulate the non-connected end with tape or heat-shrink tubing.*

8. Connect the ends of the cable as shown in *Table 6* using heat-shrink tubing (Cat. No. 40825-00). See *Figure 11* on page 24.

Table 6 Power Supply Interconnect Wiring Information

Terminal Position	Wire Color
1	No Connection
2	No Connection
3	No Connection
4	Shield (Insulate with tubing, Cat. No. 40825-00)
5	White
6	Green

9. Tighten the strain relief fitting using the supplied washer and locknut until the cable no longer slides in the strain relief.

Note: *To assure the PS1201 continues to meet NEMA 4X, I.P.66 enclosure ratings, use only the supplied NEMA-style enclosure strain relief fittings.*

10. **If other power or network connections are to be made at this time, refer to the appropriate section in this manual or the individual device manual.** If no other connections need to be made, continue with the remainder of this procedure.

11. Ensure the gaskets are properly seated and replace the faces on both Power Supplies. Replace the corner screws and tighten them to 10 lb-in (1.1 n-m) maximum to maintain the NEMA rating.

12. Restore power to the Power Supplies.

Figure 11 Power Supply Interconnect Wiring

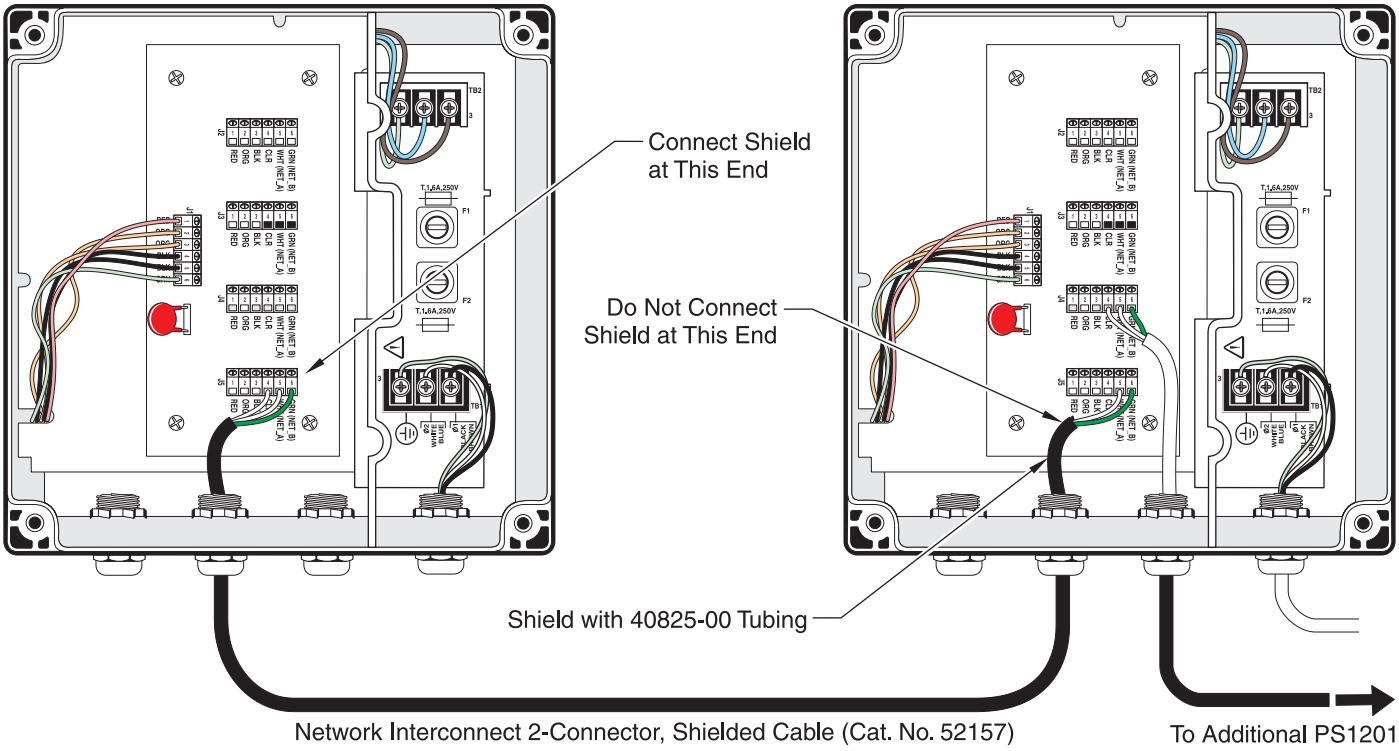

2.7 ⚠ AC Input Power

This product is designed to meet NEMA 4X (indoor) and IEC 529 I.P. 66 enclosure requirements, however, achieving these protection levels depends on the use of proper hardware in the installation of this product. Standard off-the-shelf NEMA-approved conduit hardware is available at most hardware and electrical appliance stores. Take care to select the style of conduit hardware that will seal to the enclosure wall when using flexible or rigid conduit.

CAUTION
All electrical connections should be made by a qualified technician to assure compliance to all applicable electrical codes. To meet UL, CSA and other applicable instrument safety standards, an external power disconnect switch must be installed. This power disconnect switch should be located near the instrument.

ADVERTENCIA
Todas las conexiones eléctricas deben ser realizadas por un técnico capacitado para asegurar el cuplimiento con todos los códigos eléctricos. Para cumplir con las normas UL, CSA y otras normas de seguridad aplicables a los instrumentos, debe instalarse un interruptor de desconexión de la alimentación externa. El mismo debe estar ubicado cerca del instrumento.

AVISO
Todas as conexões elétricas devem ser realizadas por técnico qualificado para garantir o cumprimento de todas as normas elétricas aplicáveis. Para cumprir as especificações UL, CSA e outras medidas de segurança padrão aplicáveis ao instrumento, deve ser instalado um interruptor externo para desligar a energia. Este interruptor desligador da energia deverá ser colocado perto do instrumento.

ATTENTION
Tous les branchements électriques doivent être effectués par un technicien qualifié, afin d'assurer le respect de toutes les normes électriques applicables. Pour répondre aux normes UL, CSA et à d'autres normes applicables concernant la sécurité de l'appareil, il est nécessaire d'installer un interrupteur externe permettant de couper l'alimentation électrique. Cet interrupteur doit être situé près de l'appareil.

WARNHINWEIS
Um zu gewährleisten, daß alle elektrischen Anschlüsse den VDE-Vorschriften und gegebenenfalls den Zusatzvorschriften der zuständigen Elektrizitätswerke sowie anderen zutreffenden Sicherheitsnormen entsprechen, dürfen diese Anschlüsse nur von geschultem Fachpersonal hergestellt werden. Um allen zutreffenden Sicherheitsbestimmungen für das Gerät zu entsprechen, muß ein externer Netztrennschalter installiert werden. Dieser Netztrennschalter sollte sich in unmittelbarer Nähe des Gerätes befinden.

Note: *AC power feeds to the PS1201 which are not contained in properly grounded metal conduit can be a source of instrumentation upset or failure if surge or transient disturbance levels exceed those levels specified for industrial type products.*

For process or industrial applications, the national electrical codes of most countries require that AC service feeds be hard-wired and contained in conduit systems. The PS1201 has been designed to conform to this requirement.

Hach recommends conduit for two reasons:

1. It is generally required by most local electrical codes, and
2. Use of metal conduit can improve immunity to lightning surges and AC power transients.

Note: *If power cords are allowed by local electrical code, a 125V UL/CSA approved power cord with an approved NEMA-style strain relief and a standard 115V North American-style plug (Hach Cat. No. 46306-00) or a 230V VDE-approved power cord with an approved NEMA-style strain relief and a Continental European-style plug (Hach Cat. No. 46308-00) can be ordered.*

Additionally, electrical and instrumentation standards require a local means of removing power from the product. **Since the PS1201 Power Supply does not have an ON/OFF switch, the customer must provide one. This may be accomplished with a customer-supplied switch box (*Figure 12*) or with a power cord (*Figure 13*).** As previously stated, a power cord method is only acceptable if local codes permit its use and the considerations outlined in the previous paragraphs are addressed.

In hard-wired electrical applications (see *Figure 12*) the power and safety ground service drops for the PS1201 should be no longer than 6 meters (20 feet) unless metal conduit is used to shield the AC power wiring. The wire should be no smaller than 14 gauge.

In applications where power cords are allowed by local electrical codes and power surges and transients are not a great concern, an 18 gauge, 3-conductor power cord (including a safety ground wire) can be used, but its length must not exceed 3 meters (10 feet) (see *Figure 13*).

In cases where metal conduit is not required by local electrical codes and conduit is not needed for transient and surge reasons, the PS1201 may be wired as shown in *Figure 13*. The power and safety ground service drops for the PS1201 should be no longer than 6 meters (20 feet) unless metal conduit is used to shield the AC power wiring. The ground wire should be no smaller than 14 gauge.

Hach recommends that care be taken with installation configurations other than shown in these manual illustrations. First ensure that they satisfy local electrical codes, and second, ensure that they do not cause susceptibility to lightning, power surges, or transients upsets.

Figure 12 Hard-wired Conduit System

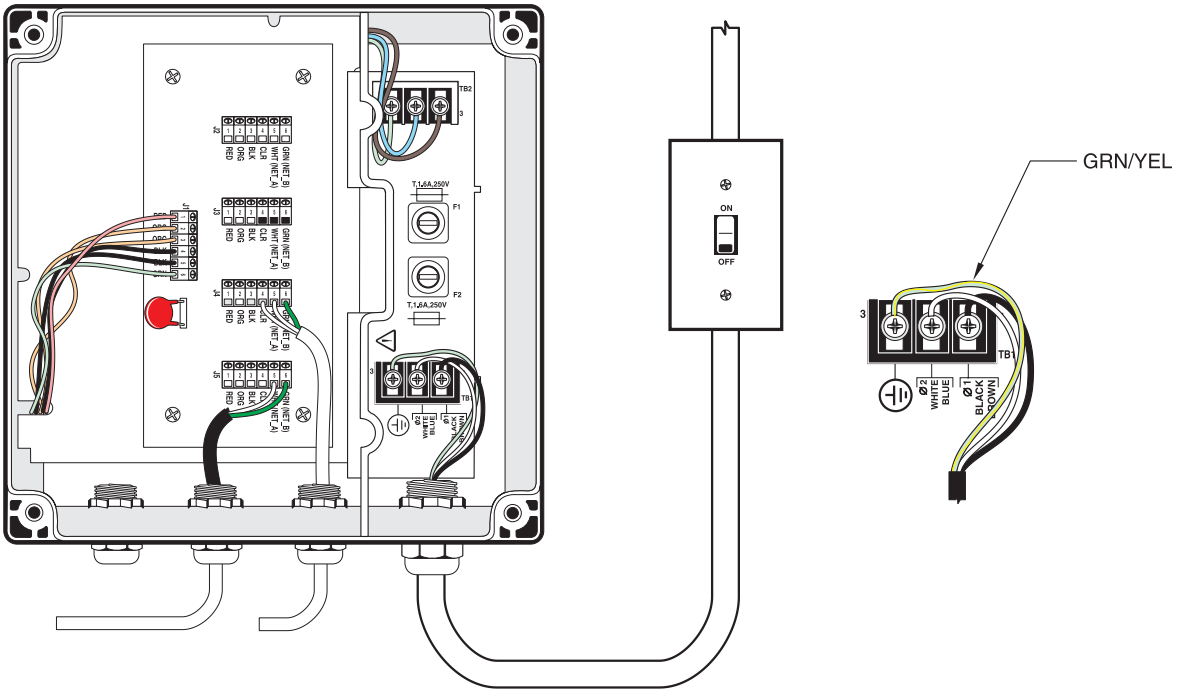

Figure 13 Power Cord Connection System

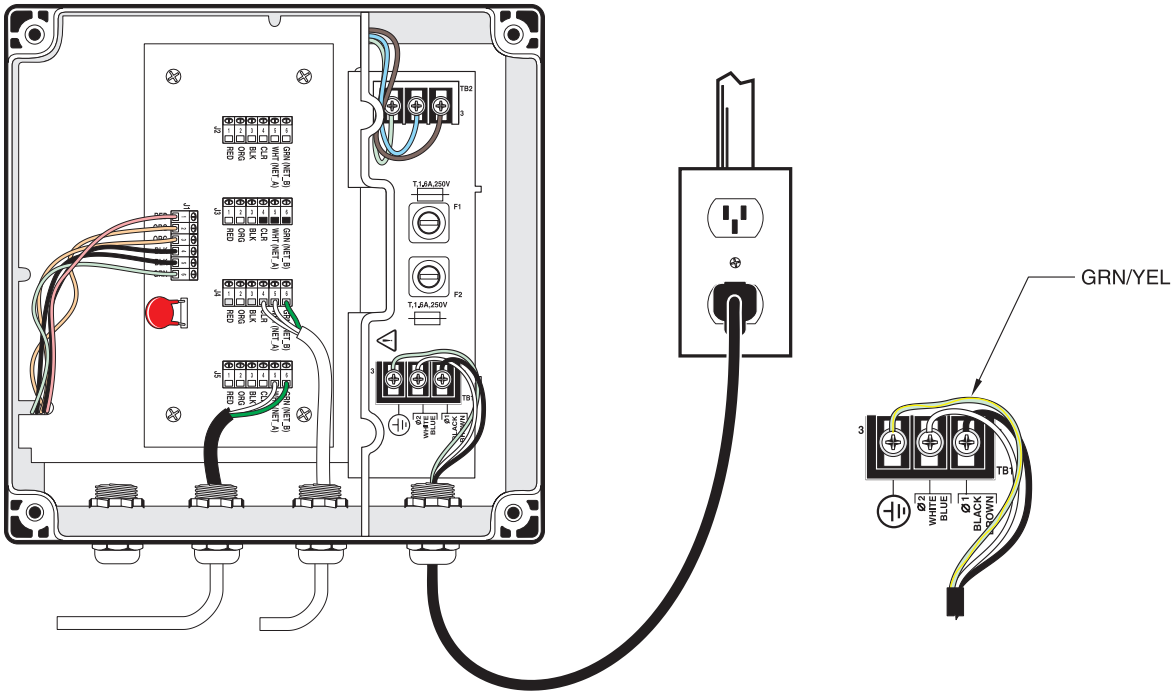

2.7.1 Wiring Specifics

Input connections at the terminal block TB1 located at the bottom right corner of the power supply board are accessible when the power supply cover is removed.

- All AC line voltage connections must be made with 18 to 10 AWG wire.
- Wire insulation must be rated for 300V RMS/600V PK; however, a water-tight strain relief is included for use with a power cord.

A power cord is not supplied with the module and must be selected to meet applicable electrical codes for the installation site.

2.7.2 Connecting AC Power to the PS1201 Power Supply

Carefully read all of the warnings in this section, and refer to *Figure 12* and *Figure 13* on page 26 to ensure the connections are correctly installed.

1. Using a flat-bladed screwdriver, unscrew the four screws securing the PS1201 face.
2. Lift the face off the module and set it aside. Or, store the front cover by screwing the right side of the front cover to the left side of the back enclosure.
3. If necessary, carefully use a punch and hammer from the outside of the enclosure to remove the rightmost knockout on the bottom of the Power Supply enclosure.
4. Route the AC wires through the conduit fitting (user-supplied) and the hole in the bottom-right side of the module.
5. Connect the three wires to the terminal block TB1 on the printed circuit board in the lower right corner of the Power Supply. See *Figure 12* and *Figure 13*.
   - Bare copper or green (North America) or green/yellow (International) to ⏚
   - Black to ∅ 1 (North America) or Brown ∅ 1 (International)
   - White to ∅ 2 (North America) or Blue to ∅ 2 (International)
6. If necessary, make electrical connections to additional devices (sensor or module) at this time as described in the following sections and skip Step *7*.

Note: *Although conduit is generally not required for the low voltage network wiring, conduit, if used, must be bonded to each other by the customer. This product does not provide automatic conduit bonding.*

7. Ensure that the gasket is properly seated in the PS1201 face and tighten the screws (10 in-lb (1.1 n-m) maximum). Do not overtighten the screws.

SECTION 3 MAINTENANCE

3.1 Power Supply Cleaning Requirements

3.1.1 Cleaning the Enclosure

With the face of the module securely closed, use a mild detergent in water and a soft cloth to clean the outside of the plastic enclosure. **Do not allow water to reach the inside of the power supply enclosure.**

3.1.2 Cleaning the Heat Sink

Check for the build-up of foreign material or obstructions on the heat sink, which is located on the back of the Power Supply. Clean as needed using compressed air to remove debris or, if proper NEMA 4X cord or conduit hardware have been used for electrical connections, you may use a water spray.

3.2 ⚠ Fuse Replacement

⚠ ***DANGER***
Instrument power must be disconnected prior to the removal or installation of the instrument input power fuses. This is accomplished by way of a remote power switch or circuit breaker system.

ADVERTENCIA
La alimentación elétrica al instrumento debe desconectarse antes de retirar o instalar los fusibles de la línea de entrada del instrumento. Esto se logra mediante un interruptor remoto de la alimentación o un sistema de cortacircuitos.

AVISO
A energia do instrumento deve ser desligada prévio a remoção ou instalação dos fusíveis da energia de entrada do mesmo. Isto efetua-se por meio de um interruptor de energia indireto ou sistema de quebra de circuito.

ATTENTION
L'alimentation électrique de l'appareil doit être interrompue avant le retrait ou la mise en place des fusibles d'alimentation électrique de l'appareil. Cela peut être effectué au moyen d'un interrupteur ou d'un disjoncteur.

WARNHINWEIS
Vor dem Herausnehmen oder Installieren der Eingangsleistungssicherungen des Geräts muß das Gerät vom Netzstrom getrennt werden. Diese Trennung wird über einen Fernnetzschalter oder ein Stromunterbrechungssystem vorgenommen.

The PS1201 Power Supply contains two identical fuses (Cat. No. 52083-00), labeled F1 and F2, which are located inside the power supply on the right side, see *Figure 14*.

Follow the instructions below to replace the fuses:

1. Disconnect all AC power to the PS1201 Power Supply.
2. Turn the fuse carrier ¼-turn counterclockwise to remove it from the Power Supply.
3. Replace the fuse (Cat. No. 52083-00) inside the carrier.
4. Turn the fuse carrier ¼-turn clockwise to reinstall it in the Power Supply.
5. Reconnect AC power to the PS1201 Power Supply.

Figure 14 Fuse Replacement

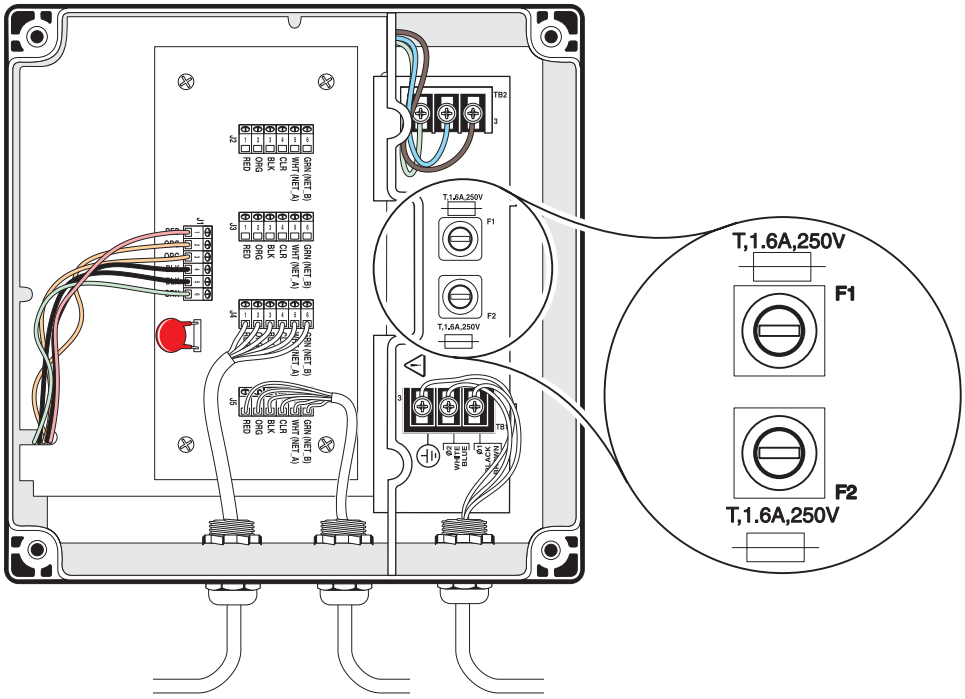

3.3 Fan Check

Check the fan by listening with your ear close to the outside of the enclosure.
Do not open the Power Supply enclosure with AC power supplied.
If you suspect the fan is not working, contact the Hach Service Department.

SECTION 4 TROUBLESHOOTING

Symptom	Possible Cause	Corrective Action
No Output Voltage	Blown fuse	Check/ Replace F1/F2 (Cat. No. 52083-00) Call the Hach Service Department
	No AC input	Check external disconnect or circuit breaker Check input AC connections Call the Hach Service Department
	Bad module	Call the Hach Service Department Replace the PS1201
+5V low/missing	Power Supply Overload/ Short Circuit/	Disconnect (one at a time) orange wire connections that are not insulated at TB1 Recheck and fix shorts Ensure maximum number of devices has not been exceeded, see Table 1 on page 9. Call the Hach Service Department Replace the PS1201
	Bad Device	Call the Hach Service Department Replace the PS1201
+12V low/missing	Short circuit/Power Supply Overload	Disconnect (one at a time) red wire connections that are not insulated at TB1 Recheck and fix shorts Ensure maximum number of devices has not been exceeded, see Table 1 on page 9. Call the Hach Service Department Replace the PS1201

To Verify Outputs

TB1	Color	Functions
1	Red	+12V DC ±10%
2	Orange	+5V DC (+5.2 to +5.3 without load)
3	Black	DC common
4	(Shield)	Chassis Ground
5	White	Network
6	Green	Network

GENERAL INFORMATION

At Hach Company, customer service is an important part of every product we make.

With that in mind, we have compiled the following information for your convenience.

REPLACEMENT PARTS

Description	Unit	Cat. No.
Communication Cable, 22 gauge, 2-conductor, shielded	per foot	52157-00
Communication Cable, 22 gauge, 2-conductor, shielded	100 ft.	52157-10
Communication Cable, 22 gauge, 2-conductor, shielded	250 ft.	52157-25
Communication Cable, 22 gauge, 2-conductor, shielded	500 ft.	52157-50
Communication Cable, 22 gauge, 2-conductor, shielded	1000 ft.	52157-51
Communication and Power Cable, 20 gauge, 4-conductor, shielded	per foot	52158-00
Communication and Power Cable, 20 gauge, 4-conductor, shielded	100 ft.	52158-10
Communication and Power Cable, 20 gauge, 4-conductor, shielded	250 ft.	52158-25
Communication and Power Cable, 20 gauge, 4-conductor, shielded	500 ft.	52158-50
Communication and Power Cable, 20 gauge, 4-conductor, shielded	1000 ft.	52158-51
Fuse (F1/F2)	each	52083-00
Plug, Strain Relief	each	52149-00
Power Cord Kit, 10A-125V, 1.8 m (6′), UL/CSA listed	each	46306-00
Power Cord Kit, 10A-230V, 1.8 m (6′), European-style plug, VDE approved	each	46308-00
Screw 5/16-18 molded	each	51230-00
Tubing, heat-shrink	per foot	40825-00
U-bolts ¼-20 x 2.843	2	51410-00

HOW TO ORDER

By Telephone:
6:30 a.m. to 5:00 p.m. MST
Monday through Friday
(800) 227-HACH (800-227-4224)

By Fax:
(970) 669-2932

By Mail:
Hach Company
P.O. Box 389
Loveland, Colorado 80539-0389 U.S.A.

Ordering information by E-mail:
orders@hach.com

Information Required

- Hach account number (if available)
- Your name and phone number
- Purchase order number
- Brief description or model number
- Billing address
- Shipping address
- Catalog number
- Quantity

Technical and Customer Service (U.S.A. only)

Hach Technical and Customer Service Department personnel are eager to answer questions about our products and their use. Specialists in analytical methods, they are happy to put their talents to work for you. Call **1-800-227-4224** or E-mail **techhelp@hach.com**.

International Customers

Hach maintains a worldwide network of dealers and distributors. To locate the representative nearest you, send E-mail to **intl@hach.com** or contact:

Hach Company World Headquarters;
P.O. Box 389 Loveland, Colorado, 80539-0389 U.S.A.
Telephone: (970) 669-3050; FAX: (970) 669-2932

REPAIR SERVICE

Authorization must be obtained from Hach Company before sending any items for repair. Please contact the HACH Service Center serving your location.

In the United States:
Hach Company
100 Dayton Avenue
Ames, Iowa 50010
(800) 227-4224 (U.S.A. only)
Telephone: (515) 232-2533
FAX: (515) 232-1276

In Canada:
Hach Sales & Service Canada Ltd.
1313 Border Street, Unit 34
Winnipeg, Manitoba
R3H 0X4
(800) 665-7635 (Canada only)
Telephone: (204) 632-5598
FAX: (204) 694-5134
E-mail: canada@hach.com

In Latin America, the Caribbean, the Far East, the Indian Subcontinent, Africa, Europe, or the Middle East:
Hach Company World Headquarters,
P.O. Box 389
Loveland, Colorado, 80539-0389 U.S.A.
Telephone: (970) 669-3050
FAX: (970) 669-2932
E-mail: intl@hach.com

WARRANTY

Hach warrants most products against defective materials or workmanship for at least one year from the date of shipment; longer warranties may apply to some items.

HACH WARRANTS TO THE ORIGINAL BUYER THAT HACH PRODUCTS WILL CONFORM TO ANY EXPRESS WRITTEN WARRANTY GIVEN BY HACH TO THE BUYER. EXCEPT AS EXPRESSLY SET FORTH IN THE PRECEDING SENTENCE, HACH MAKES NO WARRANTY OF ANY KIND WHATSOEVER WITH RESPECT TO ANY PRODUCTS. HACH EXPRESSLY DISCLAIMS ANY WARRANTIES IMPLIED BY LAW, INCLUDING BUT NOT BINDING TO ANY WARRANTY OF MERCHANTABILITY OR FITNESS FOR A PARTICULAR PURPOSE.

LIMITATION OF REMEDIES: Hach shall, at its option, replace or repair nonconforming products or refund all amounts paid by the buyer. **THIS IS THE EXCLUSIVE REMEDY FOR ANY BREACH OF WARRANTY.**

LIMITATION OF DAMAGES: IN NO EVENT SHALL HACH BE LIABLE FOR ANY INCIDENTAL OR CONSEQUENTIAL DAMAGES OF ANY KIND FOR BREACH OF ANY WARRANTY, NEGLIGENCE, ON THE BASIS OF STRICT LIABILITY, OR OTHERWISE.

This warranty applies to Hach products purchased and delivered in the United States.

Catalog descriptions, pictures and specification, although accurate to the best of our knowledge, are not guarantee or warranty.

For a complete description of Hach Company's warranty policy, request a copy of our Terms and Conditions of Sale for U.S. Sales from our Customer Service Department.

INDEX

1720D Connections 15, 16, 17

A
AC line voltage connections 27
AC service feeds 25

C
Cable Termination Kit 18
Cleaning Requirements 29
Cleaning the Enclosure 29
Cleaning the Heat Sink 29
conduit systems 25
Connecting AC Power 27

D
device wattages 9

H
hard-wired electrical applications 25

M
Mounting the Power Supply 11

N
Network/Device Interconnect 22

O
ON/OFF switch 25
operating environment 10

P
Panel Mounting 13
Pole Mounting 11
power cord 27
power requirements 9
Power Supply Knock-outs 13

S
SIO to PS1201 Power Supply Connections 20

T
terminal block TB1 27
total wattage 9

W
Wall Mounting 12
Wire insulation 27
Wiring Specifics 27

HACH COMPANY
WORLD HEADQUARTERS
P.O. Box 389
Loveland, Colorado 80539-0389
Telephone: (970) 669-3050
FAX: (970) 669-2932

FOR TECHNICAL ASSISTANCE, PRICE INFORMATION AND ORDERING:
In the U.S.A. - **Call toll-free 800-227-4224**
Outside the U.S.A. - **Contact the HACH office or distributor serving you.**
On the Worldwide Web - **www.hach.com**; E-mail - **techhelp@hach.com**