DOC346.53.80706

# WDMP, WQMP, SPMP-XX, DPMP-XX

User Manual

08/2026, Edition 5

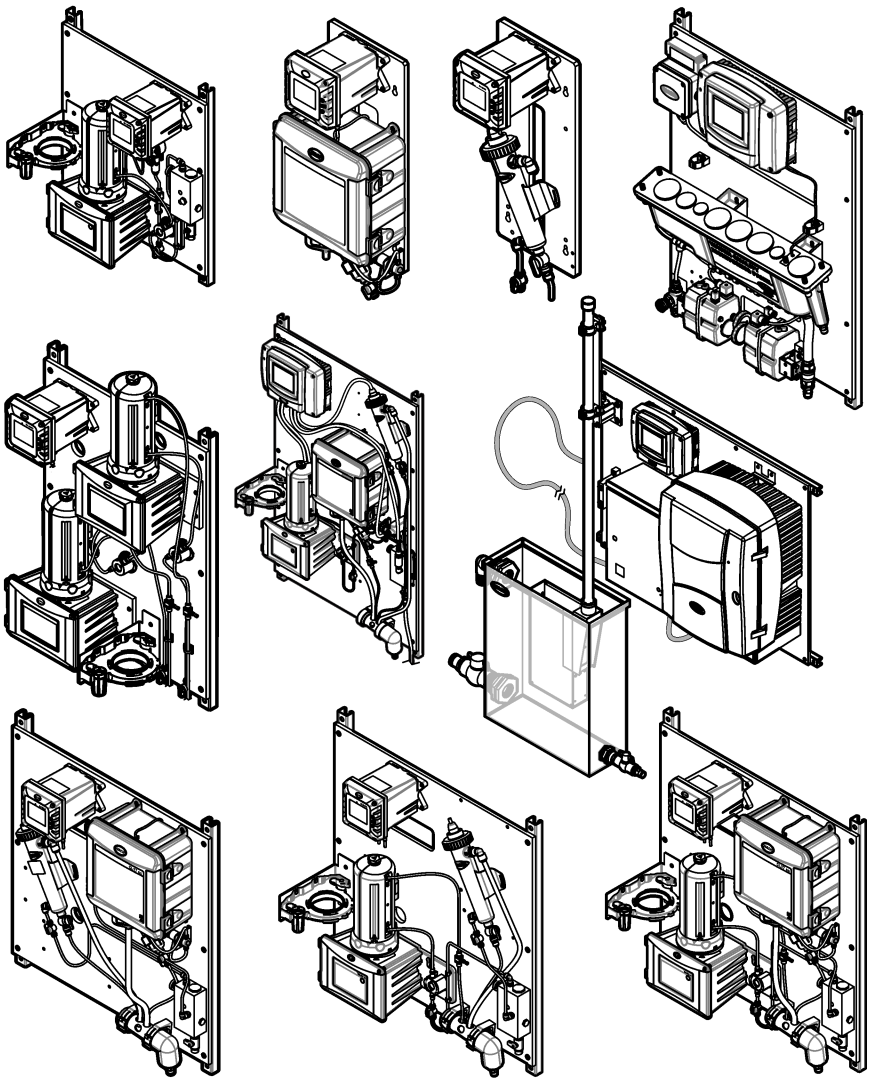

# Table of Contents


**Section 1 Water panels overview** ..... 5
1.1 General information ..... 5
1.1.1 Safety information ..... 5
1.1.2 Use of hazard information ..... 5
1.1.3 Certification ..... 6
1.2 Intended use ..... 6
1.3 Installation guidelines ..... 7
1.4 General specifications ..... 8
1.4.1 Safety requirements for panels with no controller ..... 8
1.5 Maintenance ..... 8
1.5.1 Look for leaks and blockages ..... 8
1.5.2 Clean the panel ..... 8
1.5.3 Component maintenance tasks ..... 8

**Section 2 WDMP** ..... 9
2.1 Product overview ..... 9
2.2 Specifications ..... 12
2.3 Product components ..... 13
2.4 Installation ..... 14
2.4.1 Install the SC1000 Controller (if applicable) ..... 14
2.4.1.1 Attach the controller to the panel ..... 15
2.4.1.2 Connect the instrument cables ..... 16
2.4.1.3 Install the pressure gauge ..... 16
2.4.2 Install the ACM on the turbidimeter ..... 22
2.4.3 Mounting ..... 22
2.4.4 Install the sample and drain lines ..... 24
2.4.5 Remove the cap from the pH sensor ..... 25
2.5 Startup ..... 25
2.6 Operation ..... 26
2.7 Replacement parts and accessories ..... 26

**Section 3 WQMP** ..... 27
3.1 Product overview ..... 27
3.2 Specifications ..... 29
3.3 Product components ..... 30
3.4 Installation ..... 31
3.4.1 Install the SC1000 Controller (if applicable) ..... 31
3.4.1.1 Attach the controller to the panel ..... 32
3.4.1.2 Install the junction box and level sensor ..... 33
3.4.2 Mounting ..... 36
3.4.3 Install the sample, flush and drain lines ..... 39
3.4.4 Install the sensors ..... 41
3.5 Startup ..... 43
3.6 Operation ..... 44
3.6.1 Change the automatic flush valve settings ..... 44
3.7 Replacement parts and accessories ..... 45

**Section 4 SPMP-CL and SPMP-ULRCL** ..... 47
4.1 Product overview ..... 47
4.2 Specifications ..... 47
4.3 Product components ..... 48
4.4 Installation ..... 48
4.4.1 Mounting ..... 48
4.4.2 Install the sample and drain lines ..... 51

4.5 Startup ..... 51
4.6 Operation ..... 52
4.7 Replacement parts and accessories ..... 52
**Section 5 SPMP-PHD** ..... 53
5.1 Product overview ..... 53
5.2 Specifications ..... 53
5.3 Product components ..... 54
5.4 Installation ..... 54
5.4.1 Attach the controller to the panel (if applicable) ..... 55
5.4.2 Mounting ..... 55
5.4.3 Install the sample and drain lines ..... 57
5.4.4 Remove the cap from the pH sensor ..... 58
5.5 Startup ..... 58
5.6 Operation ..... 59
5.7 Replacement parts and accessories ..... 59
**Section 6 SPMP-TU** ..... 61
6.1 Product overview ..... 61
6.2 Specifications ..... 62
6.3 Product components ..... 62
6.4 Installation ..... 63
6.4.1 Install the SC4500 Controller (if applicable) ..... 63
6.4.1.1 Attach the controller to the panel ..... 63
6.4.1.2 Connect the instrument cables ..... 64
6.4.2 Install the ACM on the turbidimeter ..... 65
6.4.3 Mounting ..... 65
6.4.4 Install the sample and drain lines ..... 67
6.5 Startup ..... 67
6.6 Operation ..... 68
6.7 Replacement parts and accessories ..... 68
**Section 7 DPMP-TU5300** ..... 69
7.1 Product overview ..... 69
7.2 Specifications ..... 70
7.3 Product components ..... 71
7.4 Installation ..... 71
7.4.1 Install the ACM on the turbidimeter ..... 72
7.4.2 Mounting ..... 72
7.4.3 Install the sample and drain lines ..... 74
7.5 Startup ..... 75
7.6 Operation ..... 75
7.7 Replacement parts and accessories ..... 75
**Section 8 DPMP-CLPHD** ..... 77
8.1 Product overview ..... 77
8.2 Specifications ..... 77
8.3 Product components ..... 78
8.4 Installation ..... 78
8.4.1 Mounting ..... 78
8.4.2 Install the sample and drain lines ..... 81
8.4.3 Remove the cap from the pH sensor ..... 82
8.5 Startup ..... 82
8.6 Operation ..... 83
8.7 Replacement parts and accessories ..... 83

**Section 9 DPMP-CLTU** ..... 85
9.1 Product overview ..... 85
9.2 Specifications ..... 85
9.3 Product components ..... 86
9.4 Installation ..... 86
9.4.1 Install the ACM on the turbidimeter ..... 87
9.4.2 Mounting ..... 87
9.4.3 Install the sample and drain lines ..... 89
9.5 Startup ..... 89
9.6 Operation ..... 90
9.7 Replacement parts and accessories ..... 90
**Section 10 DPMP-TUPHD** ..... 91
10.1 Product overview ..... 91
10.2 Specifications ..... 91
10.3 Product components ..... 92
10.4 Installation ..... 92
10.4.1 Install the ACM on the turbidimeter ..... 93
10.4.2 Mounting ..... 93
10.4.3 Install the sample and drain lines ..... 95
10.4.4 Remove the cap from the pH sensor ..... 96
10.5 Startup ..... 96
10.6 Operation ..... 97
10.7 Replacement parts and accessories ..... 97
**Section 11 DPMP-POFTX** ..... 99
11.1 Product overview ..... 99
11.2 Specifications ..... 100
11.3 Product components ..... 101
11.4 Installation ..... 101
11.4.1 Mounting ..... 101
11.4.2 Install the sample and drain lines ..... 106
11.5 Startup ..... 106
11.6 Operation ..... 107

# Section 1 Water panels overview

The water panels are a group of water quality instruments that are pre-plumbed and wired on a single panel with a digital controller. The user hangs the panel on a wall, connects the sample and drain lines, and if necessary, prepares the sensors for operation. User manuals are supplied for the controller and the applicable instruments. Refer to the applicable user manuals for safety information, calibration and operation of the components.

This section is applicable to all of the water panels. Refer to the sections that follow for specific information about each of the water panels:


- WDMP on page 9
- WQMP on page 27
- SPMP-CL and SPMP-ULRCL on page 47
- SPMP-PHD on page 53
- SPMP-TU on page 61
- DPMP-TU5300 on page 69
- DPMP-CLPHD on page 77
- DPMP-CLTU on page 85
- DPMP-TUPHD on page 91
- DPMP-POFTX on page 99


## 1.1 General information

In no event will the manufacturer be liable for direct, indirect, special, incidental or consequential damages resulting from any defect or omission in this manual unless otherwise required by applicable law or contract between the parties. The manufacturer reserves the right to make changes in this manual and the products it describes at any time, without notice or obligation. Revised editions are found on the manufacturer's website.

### 1.1.1 Safety information

The manufacturer is not responsible for any damages due to misapplication or misuse of this product including, without limitation, direct, incidental and consequential damages, and disclaims such damages to the full extent permitted under applicable law. The user is solely responsible to identify critical application risks and install appropriate mechanisms to protect processes during a possible equipment malfunction.

Please read this entire manual before unpacking, setting up or operating this equipment. Pay attention to all danger and caution statements. Failure to do so could result in serious injury to the operator or damage to the equipment.

If the equipment is used in a manner that is not specified by the manufacturer, the protection provided by the equipment may be impaired. Do not use or install this equipment in any manner other than that specified in this manual.

### 1.1.2 Use of hazard information

**⚠DANGER**

Indicates a potentially or imminently hazardous situation which, if not avoided, will result in death or serious injury.

**⚠WARNING**

Indicates a potentially or imminently hazardous situation which, if not avoided, could result in death or serious injury.

**⚠CAUTION**

Indicates a potentially hazardous situation that may result in minor or moderate injury.

**NOTICE**

Indicates a situation which, if not avoided, may cause damage to the instrument. Information that requires special emphasis.

### 1.1.3 Certification

**EN 55011/CISPR 11 Notification Warning**

This is a Class A product. In a domestic environment this product may cause radio interference in which case the user may be required to take adequate measures.

**Canadian Radio Interference-Causing Equipment Regulation, ICES-003, Class A**:

Supporting test records reside with the manufacturer.

This Class A digital apparatus meets all requirements of the Canadian Interference-Causing Equipment Regulations.

Cet appareil numérique de classe A répond à toutes les exigences de la réglementation canadienne sur les équipements provoquant des interférences.

**FCC Part 15, Class "A" Limits**

Supporting test records reside with the manufacturer. The device complies with Part 15 of the FCC Rules. Operation is subject to the following conditions:

1. The equipment may not cause harmful interference.
2. The equipment must accept any interference received, including interference that may cause undesired operation.

Changes or modifications to this equipment not expressly approved by the party responsible for compliance could void the user's authority to operate the equipment. This equipment has been tested and found to comply with the limits for a Class A digital device, pursuant to Part 15 of the FCC rules. These limits are designed to provide reasonable protection against harmful interference when the equipment is operated in a commercial environment. This equipment generates, uses and can radiate radio frequency energy and, if not installed and used in accordance with the instruction manual, may cause harmful interference to radio communications. Operation of this equipment in a residential area is likely to cause harmful interference, in which case the user will be required to correct the interference at their expense. The following techniques can be used to reduce interference problems:

1. Disconnect the equipment from its power source to verify that it is or is not the source of the interference.
2. If the equipment is connected to the same outlet as the device experiencing interference, connect the equipment to a different outlet.
3. Move the equipment away from the device receiving the interference.
4. Reposition the receiving antenna for the device receiving the interference.
5. Try combinations of the above.

## 1.2 Intended use

The water panels are intended for use by water treatment professionals who measure multiple water quality parameters in industrial water, municipal water or waste process applications. The water panel components do not treat or alter water.

## 1.3 Installation guidelines

**DANGER**

Multiple hazards. Only qualified personnel must conduct the tasks described in this section of the document.

**DANGER**

Electrocution hazard. Protective Earth Ground (PE) connection is required.

**DANGER**

Electrical shock and fire hazards. Make sure to identify the local disconnect clearly for the conduit installation.

**WARNING**

Electrocution hazard. The local disconnection means must disconnect all the electrical current-carrying conductors. Mains connection must keep supply polarity. The separable plug is the disconnect means for cord connected equipment.

**WARNING**

Electrical shock hazard. Externally connected equipment must have an applicable country safety standard assessment.

**NOTICE**

Do not install the controller in an environment with a caustic atmosphere without a protective enclosure. A caustic atmosphere will cause damage to electronic circuitry and components.

**DANGER**

Chemical or biological hazards. If this instrument is used to monitor a treatment process and/or chemical feed system for which there are regulatory limits and monitoring requirements related to public health, public safety, food or beverage manufacture or processing, it is the responsibility of the user of this instrument to know and abide by any applicable regulation and to have sufficient and appropriate mechanisms in place for compliance with applicable regulations in the event of malfunction of the instrument.

- This equipment is intended for indoor installation only.
- Do not install the equipment in a location that receives direct exposure to sunlight or ultraviolet radiation (UV).
- Install the equipment at a height where the user can easily see the components and complete maintenance tasks.
- If AC power is used, install the equipment near the electrical outlet. Protect the electrical outlet from possible fluid leaks.

## 1.4 General specifications

Specifications are subject to change without notice.

| Specification | Details |
|---|---|
| Environmental conditions | Indoor only |
| Operating temperature | 5 to 40 °C (41 to 104 °F) |
| Sample temperature | 5 to 40 °C (41 to 104 °F) |
| Altitude | 2000 m (6562 ft) maximum |
| Sample waste drain pressure | Ambient, free-flowing (atmospheric) |
| Warranty | 1 year |

### 1.4.1 Safety requirements for panels with no controller

Controllers that are installed on the panel by the user must have a certificate for product safety from a Nationally Recognized Testing Laboratory (NRTL). An NRTL is an independent testing laboratory that is certified by the Occupational Health and Safety Administration (OSHA).

The NRTL safety certificate verifies that products are considered safe for use in the U.S.A. and Canada and obey all relevant country safety standards.

All Hach controllers are safety certified per the above requirements.

## 1.5 Maintenance

**⚠CAUTION**



Multiple hazards. Only qualified personnel must conduct the tasks described in this section of the document.

### 1.5.1 Look for leaks and blockages

Examine the system for leaks and blockages as follows:

- Inlet and drain tubing
- Sample flow valve
- O-ring seal on the sensors
- Fittings, elbows and couplers

### 1.5.2 Clean the panel

**NOTICE**

Do not use solvents or a pressurized hose to clean the panel.

1. Use a mild detergent to wash the surface of the panel.
2. Use a slightly damp cloth to clean the surface of the panel.

### 1.5.3 Component maintenance tasks

Refer to the supplied user manuals for each panel component for the recommended maintenance tasks.

# Section 2 WDMP

## 2.1 Product overview

The Water Distribution Monitoring Panel sc (WDMP sc) is an assembly of instruments that monitors the water quality in a distribution system. The instruments measure chlorine, conductivity, pH, turbidity, pressure and temperature. The instruments are assembled on a panel with most electrical and plumbing connections installed at the factory. The controller on the panel sends the data to a communications network for remote monitoring. The user must make electrical connections on the panels that ship without the controller.

Refer to Figure 1 and Table 1 for the WDMP sc panels that include the CL17sc chlorine analyzer. Refer to Figure 2 and Table 2 for the WDMP sc panels that include the CLF10 or CLT10 chlorine analyzer. All WDMP sc panels include the conductivity, pH, temperature and pressure sensors.

**Figure 1 WDMP sc overview—CL17sc chlorine analyzer**

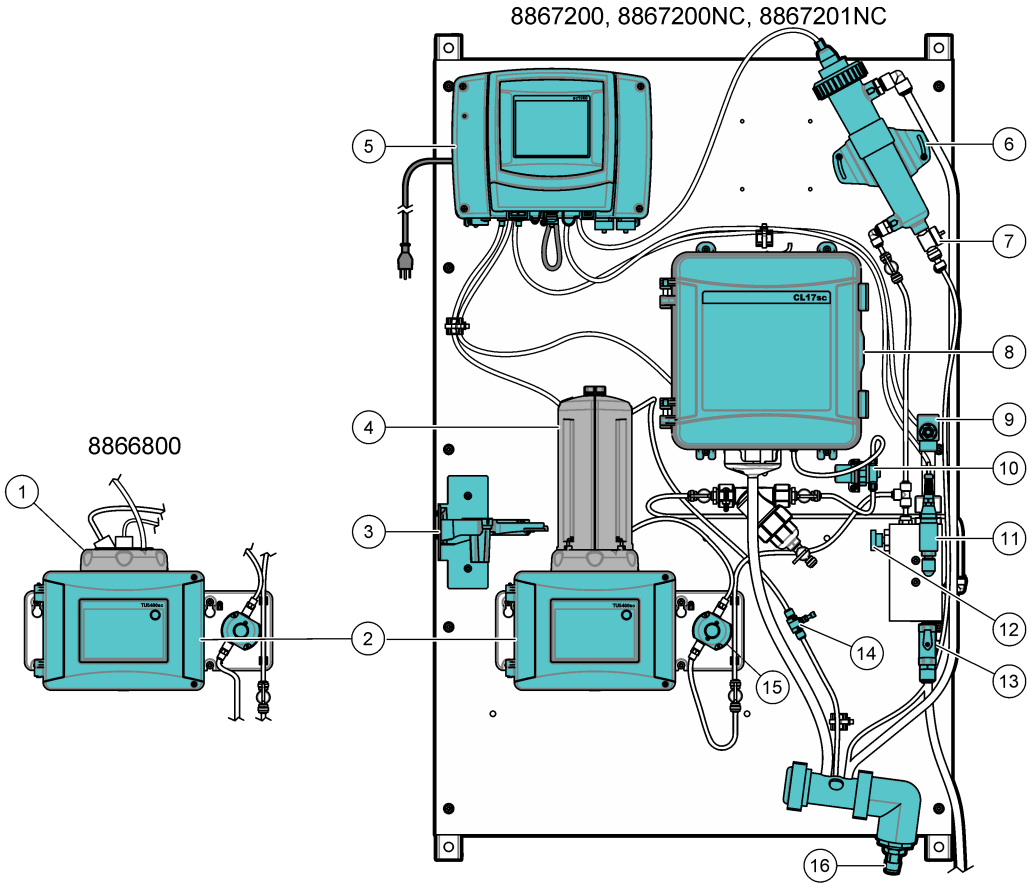


| | |
|---|---|
| **1** Process head | **9** Conductivity sensor |
| **2** TU5300sc Turbidimeter | **10** Pressure regulator |
| **3** Service bracket | **11** Pressure sensor |
| **4** Automatic Cleaning Module (ACM), optional | **12** Inlet needle valve |
| **5** SC1000 Controller | **13** Inlet ball valve |
| **6** Flow cell with pH sensor | **14** Flow regulator |
| **7** Maintenance drain valve | **15** Flow sensor |
| **8** CL17sc chlorine analyzer | **16** Drain manifold |

**Table 1 Panels with CL17sc chlorine analyzer**

| Part number | SC1000 | CL17sc | TU5300sc | TU5400sc | ACM |
|---|---|---|---|---|---|
| 8866800 | ✔ | ✔ | ✔ | | |
| 8867200 | ✔ | ✔ | ✔ | | ✔ |
| 8867200NC | | ✔ | ✔ | | ✔ |
| 8867201NC | | ✔ | | ✔ | ✔ |

**Figure 2 WDMP sc overview—CLF10 or CLT10 chlorine analyzer**

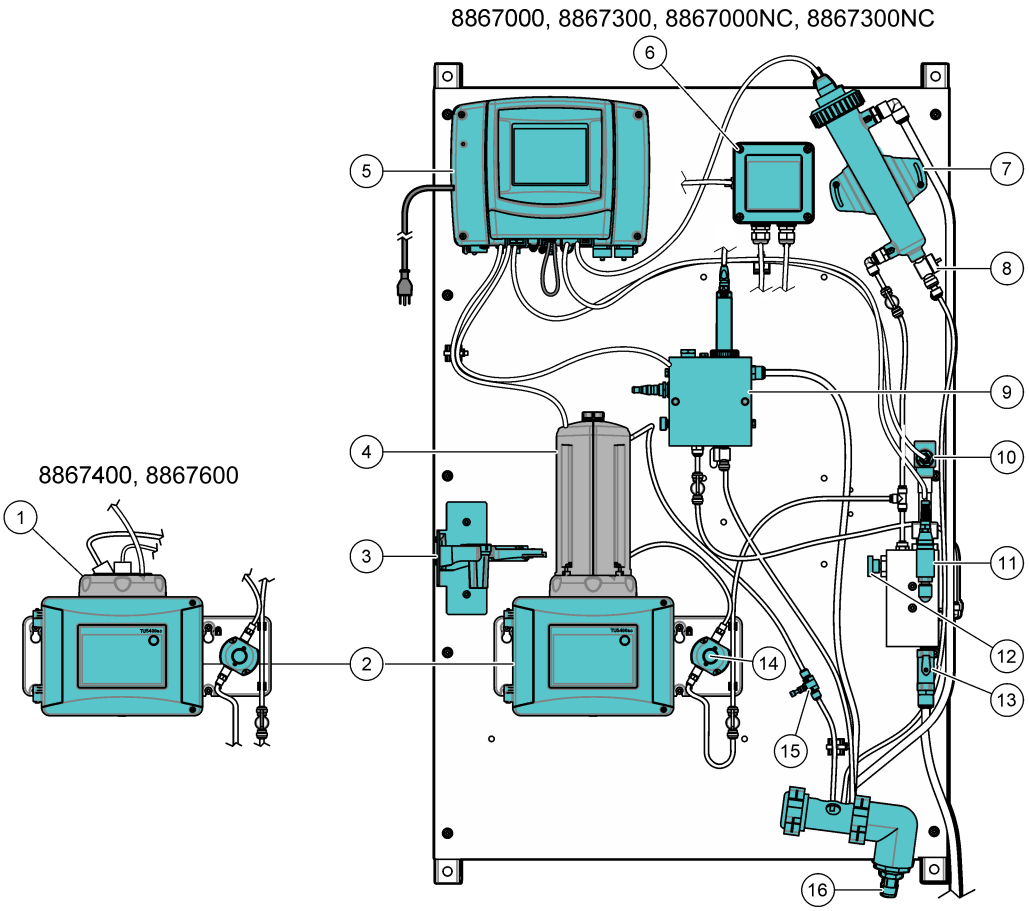


| | |
|---|---|
| **1** Process head | **9** CLF10 or CLT10 flow cell |
| **2** TU5300sc Turbidimeter | **10** Conductivity sensor |
| **3** Service bracket | **11** Pressure sensor |
| **4** Automatic Cleaning Module (ACM), optional | **12** Inlet needle valve |
| **5** SC1000 Controller | **13** Inlet ball valve |
| **6** CLF10 or CLT10 gateway | **14** Flow sensor |
| **7** Flow cell with pH sensor | **15** Flow regulator |
| **8** Maintenance drain valve | **16** Drain manifold |

**Table 2 Panels with CLF10 or CLT10 chlorine analyzer**

| Part number | SC1000 | CLF10 | CLT10 | TU5300sc | ACM |
|---|---|---|---|---|---|
| 8867000 | ✔ | | ✔ | ✔ | ✔ |
| 8867000NC | | | ✔ | ✔ | ✔ |
| 8867300 | ✔ | ✔ | | ✔ | ✔ |
| 8867300NC | | ✔ | | ✔ | ✔ |
| 8867400 | ✔ | ✔ | | ✔ | |
| 8867600 | ✔ | | ✔ | ✔ | |

## 2.2 Specifications

Specifications are subject to change without notice. The specifications that follow are for the WDMP sc panel. Refer to the instrument user manuals for the analyzer, controller, turbidimeter and sensor specifications.

| Specification | Details |
|---|---|
| Dimensions (W x H x D) | 81 x 130 x 29 cm (32 x 51 x 11 inch). The dimensions are approximately the same for the six panels. |
| Weight | With CL17sc analyzer: 34.0 kg (75 lb) |
| | With CLF10 or CLT10 analyzer: 31.8 kg (70 lb) |
| Power requirements | 100–240 (±10) VAC, 50/60 Hz; maximum 1000 VA |
| Sample flow rate | 0.4 to 0.6 L/min |
| Sample pressure | 517 kPa (75 psi) maximum |
| Sample inlet connection | ½-inch OD tube |
| Sample waste drain connection | ¾-inch ID hose barb |
| Pressure sensor | Stainless steel (17–4 PH), Input: 7–35 VDC; Output: 4–20 mA, 0–1034 kPa (0–150 psi) |
| Certifications | SC1000 Controller is CE compliant and is TÜV listed to UL and CSA safety standards |

## 2.3 Product components

Make sure that all components have been received. Refer to Figure 3. If any items are missing or damaged, contact the manufacturer or a sales representative immediately.

**Figure 3 Product components**

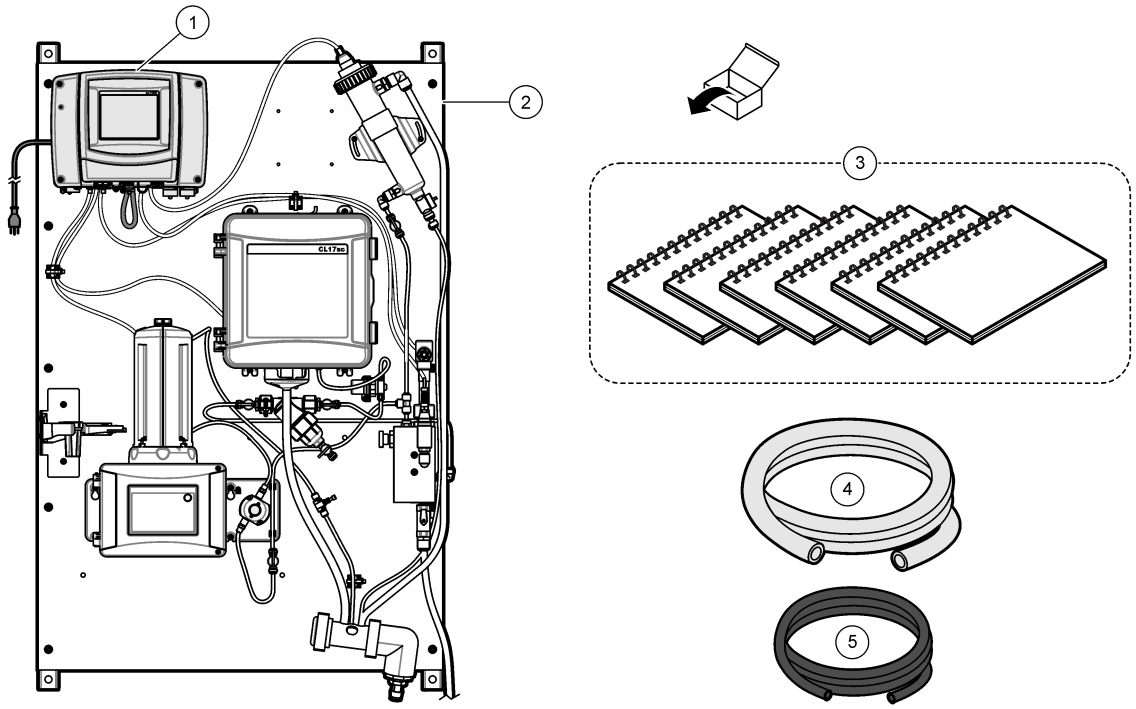


| | |
|---|---|
| **1** SC1000 Controller (not included with WDMP panels 8867200NC, 8867201NC, 8867000NC, 8867300NC) | **4** Tubing, drain, ¾-inch ID × 1-inch OD, 1.8 m (6 ft) |
| **2** WDMP sc panel (with CL17sc chlorine analyzer option) | **5** Tubing, sample, 0.375-inch ID × 0.500-inch OD, 3 m (10 ft) |
| **3** User manuals (Table 3) | |

**Table 3 User Manuals included with the WDMP**

| Component | User manual | Document number |
|---|---|---|
| pH sensor | pHD sc Digital Differential pH/ORP Sensors User Manual, Languages of the Americas and Asian countries | DOC023.97.80605 |
| | pHD sc Digital Differential pH/ORP Sensors User Manual, European languages | DOC023.98.80605 |
| Conductivity sensor | Digital Contacting Conductivity Sensor User Manual | 6120318 |
| Turbidimeter | TU5300sc-TU5400sc Basic User Manual, EPA | DOC023.97.90501 |
| | Automatic Cleaning Module (ACM) User Instructions (if ACM included) | DOC273.97.90480 |
| | Flow Sensor User Instructions | DOC273.99.90491 |
| Chlorine analyzer, CL17sc (if included) | CL17sc User Manual | DOC023.97.80614 |
| | CL17sc Filter and Pressure Regulator Installation | DOC273.99.80617 |
| Chlorine analyzer, CL10F or CL10T (if included) | CLT10 and CLF10 Chlorine Sensor User Manual | DOC023.97.80088 |
| | CLT10 and CLF10 Gateway Replacement User Instructions | DOC273.99.80229 |

**Table 3 User Manuals included with the WDMP (continued)**

| Component | User manual | Document number |
|---|---|---|
| Controller (if included) | SC1000 Controller User Manual | DOC023.53.90007 |
| | SC1000 Controller Enhanced Communications Manual | DOC023.53.90143 |
| | PROGNOSYS User Manual | DOC023.53.90351 |

## 2.4 Installation

**⚠WARNING**



Multiple hazards. Only qualified personnel must conduct the tasks described in this section of the document.

### 2.4.1 Install the SC1000 Controller (if applicable)

**⚠DANGER**



Electrocution hazard. Always remove power to the instrument before making electrical connections.

The user must install an SC1000 Controller on the WDMP panels that ship without a controller (8867200NC, 8867201NC, 8867000NC, 8867300NC). Mount the controller and make the electrical connections as follows:


- Attach the controller to the panel on page 15
- Connect the instrument cables on page 16
- Install the pressure gauge on page 16

#### 2.4.1.1 Attach the controller to the panel

The SC1000 Controller probe module has four mounting holes that align with four mounting bolts on the panel. Refer to Figure 4 to attach the controller to the panel.

**Figure 4 Attach the SC1000 Controller to the panel**

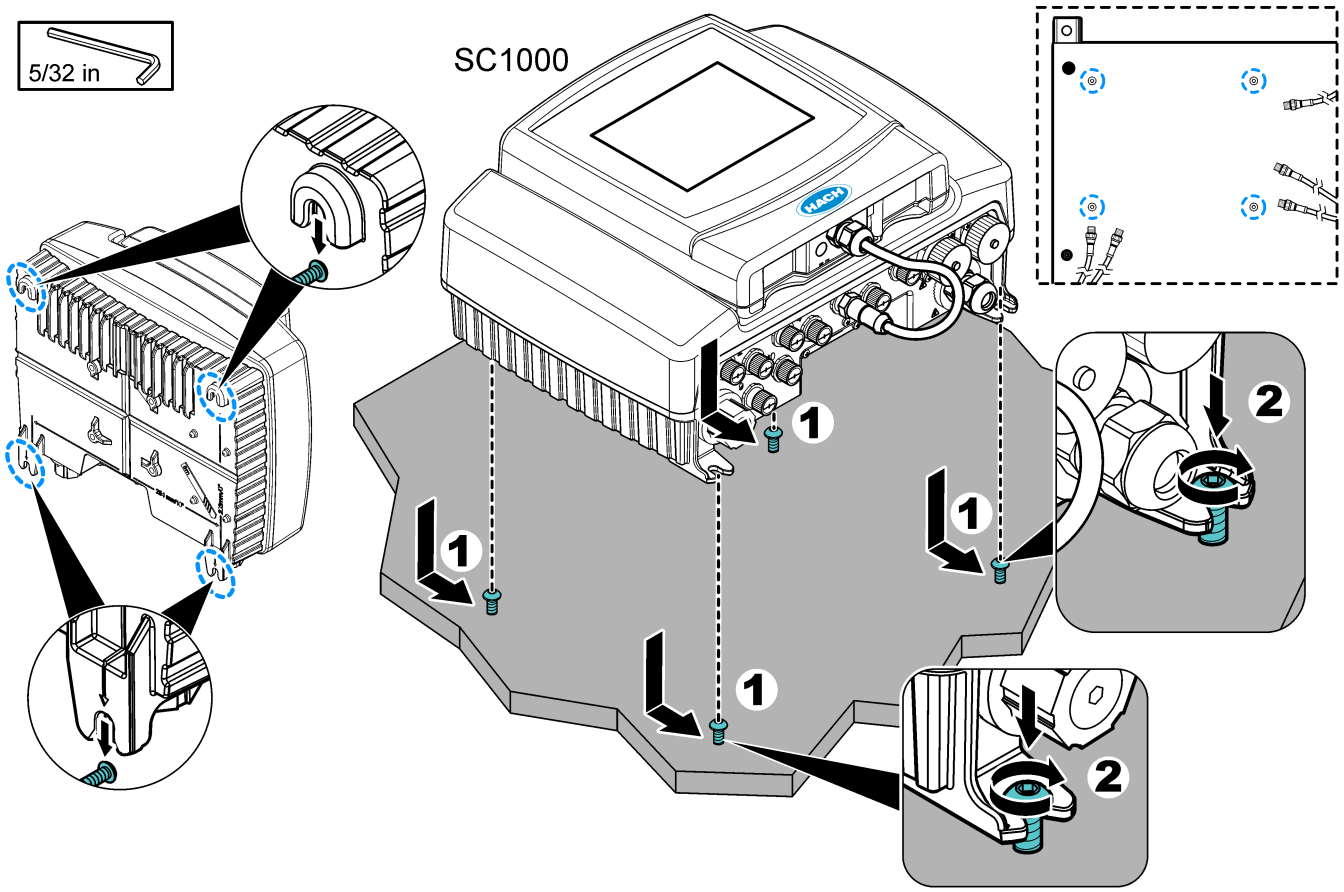

### 2.4.1.2 Connect the instrument cables

Connect each cable from the instruments on the WDMP panel to one of the digital SC connectors on the SC1000 Controller. Refer to Figure 5.

**Figure 5 Connect the instrument cables to the controller**

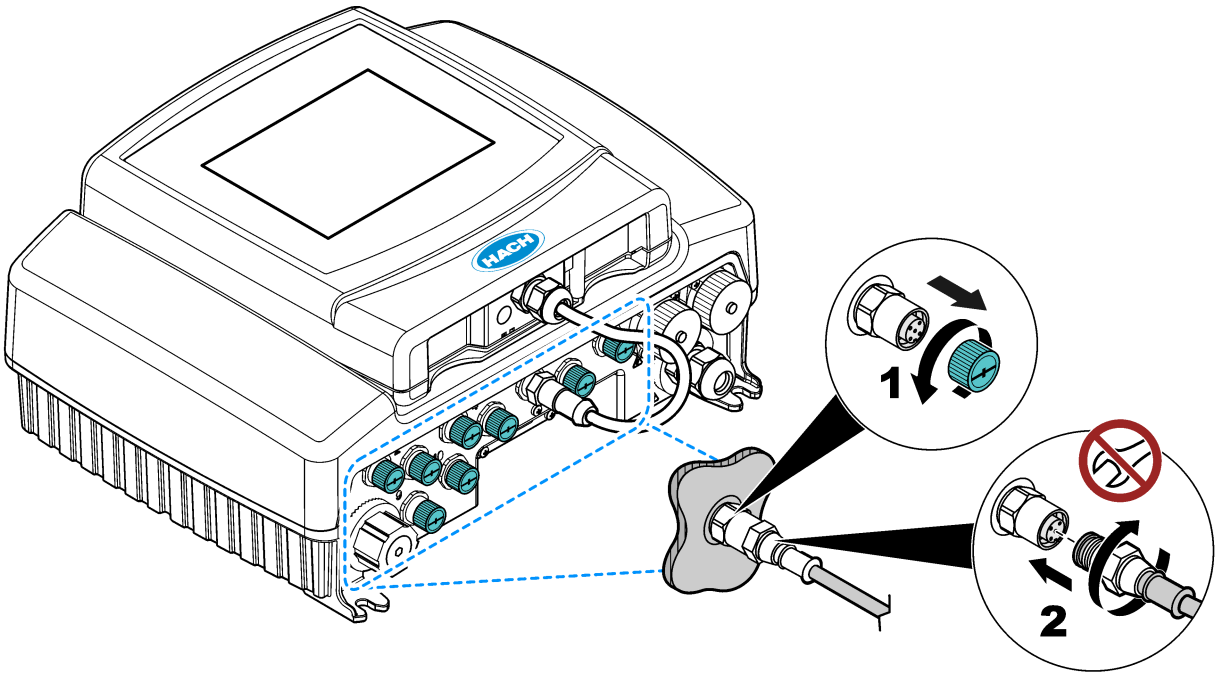


### 2.4.1.3 Install the pressure gauge

The pressure gauge is mounted on the WDMP panels at the factory. Refer to the illustrated steps that follow to connect the wires from the pressure gauge to the SC1000 Controller.

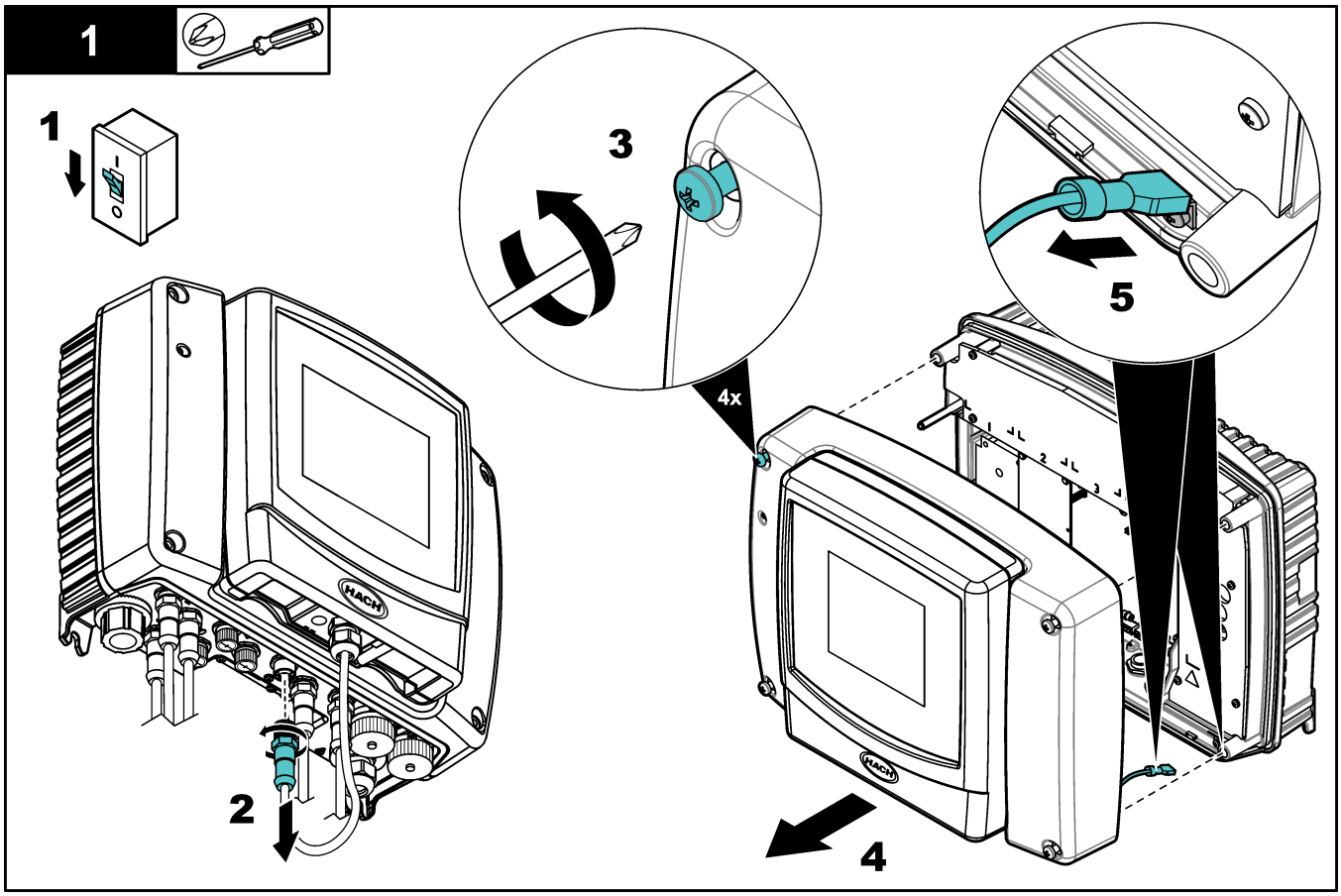
1
1
2
3
4x
4
5

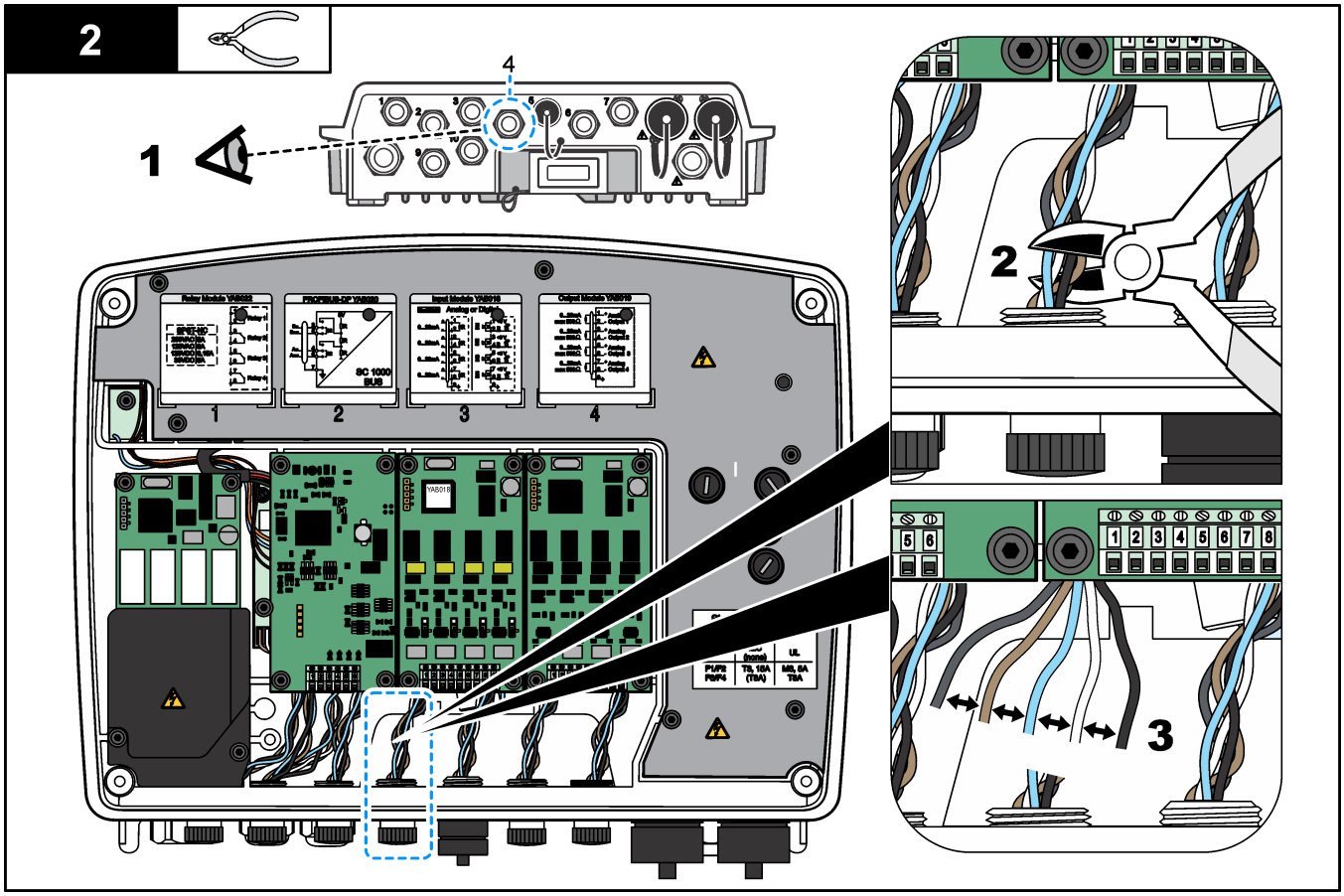
2
1
4
2
3

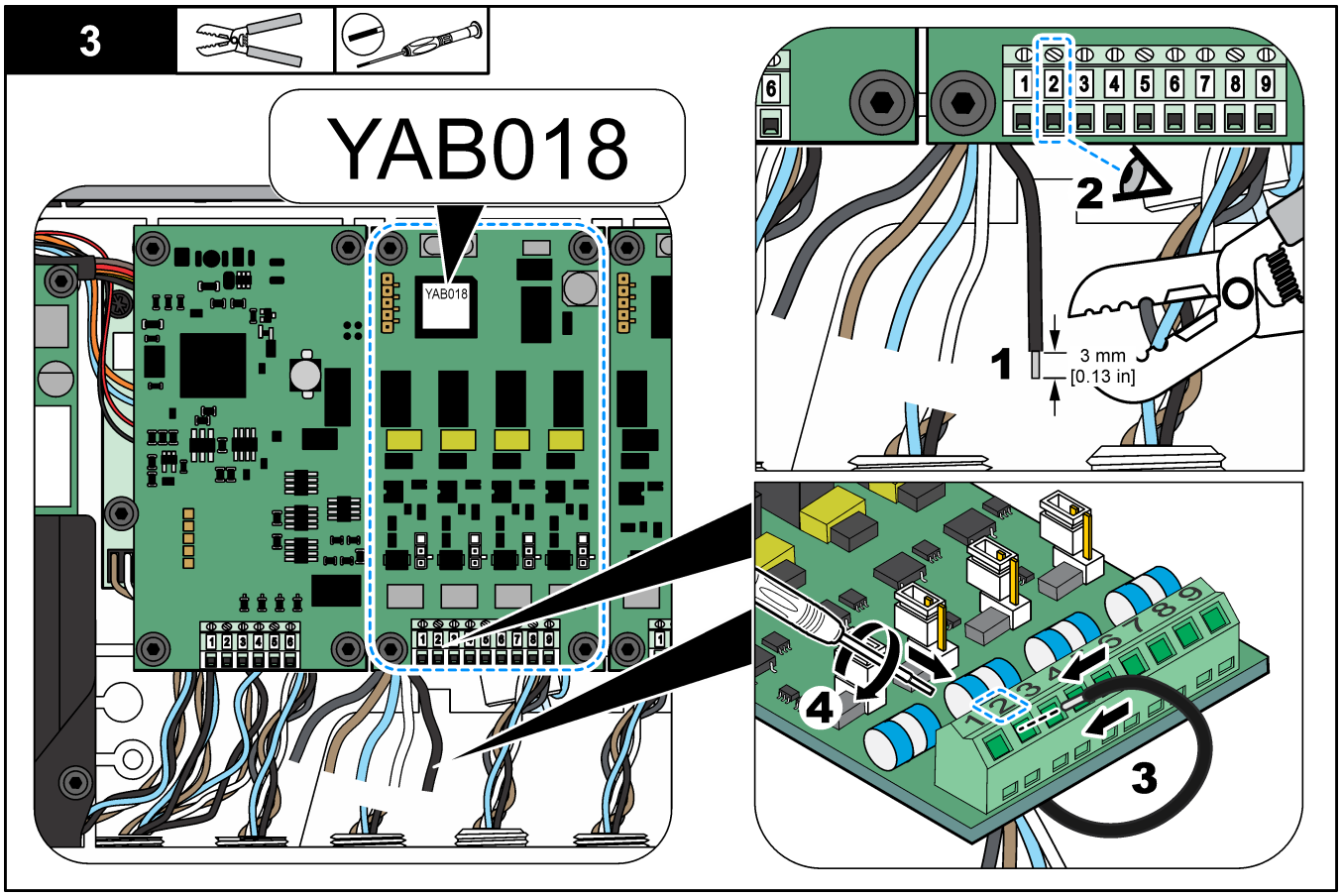
3
YAB018
YAB018
1 2 3 4 5 6 7 8 9
6
2
1
3 mm
[0.13 in]
4
3

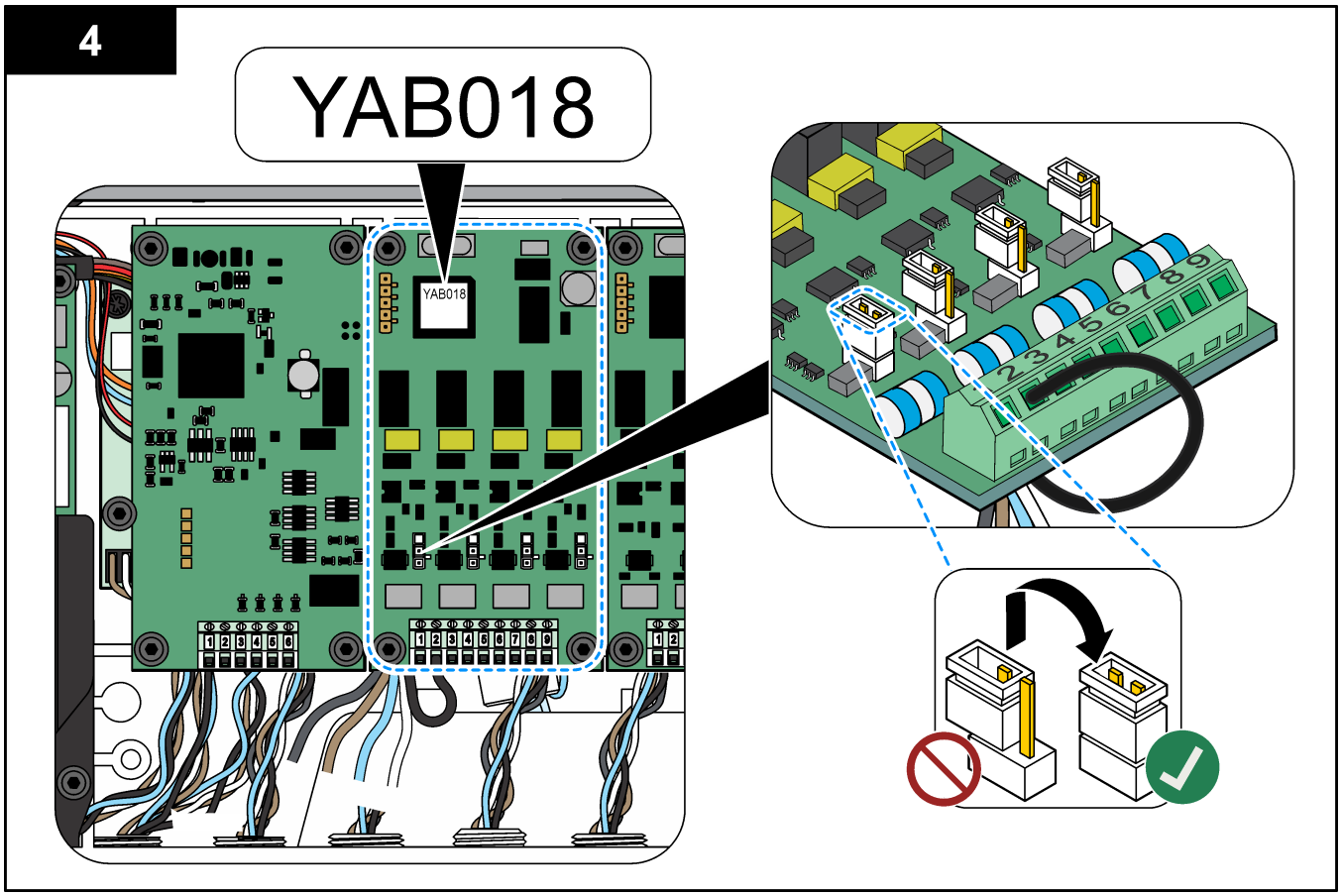
4
YAB018
YAB018

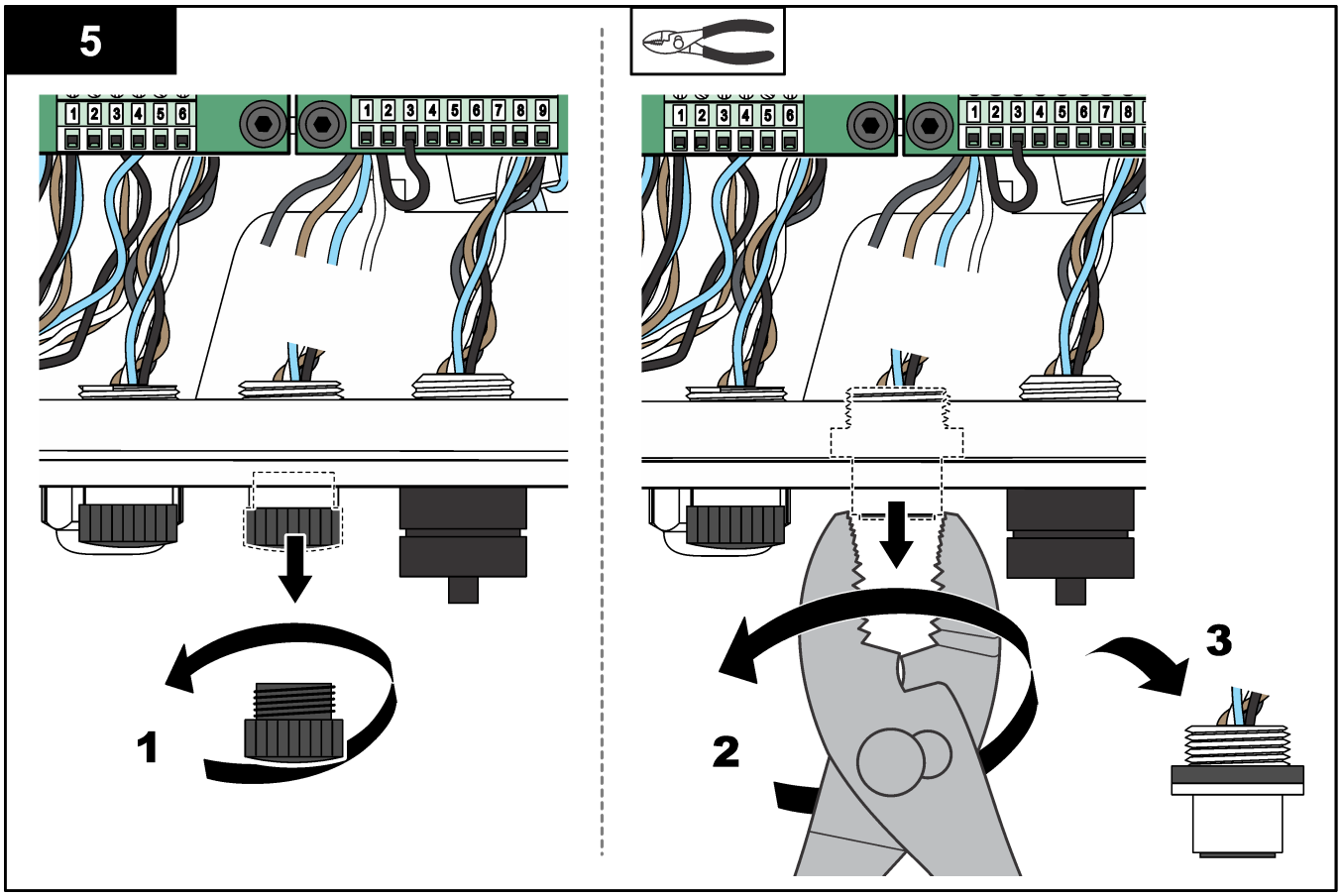
5
1 2 3 4 5 6
1 2 3 4 5 6 7 8 9
1
1 2 3 4 5 6
1 2 3 4 5 6 7 8
2
3

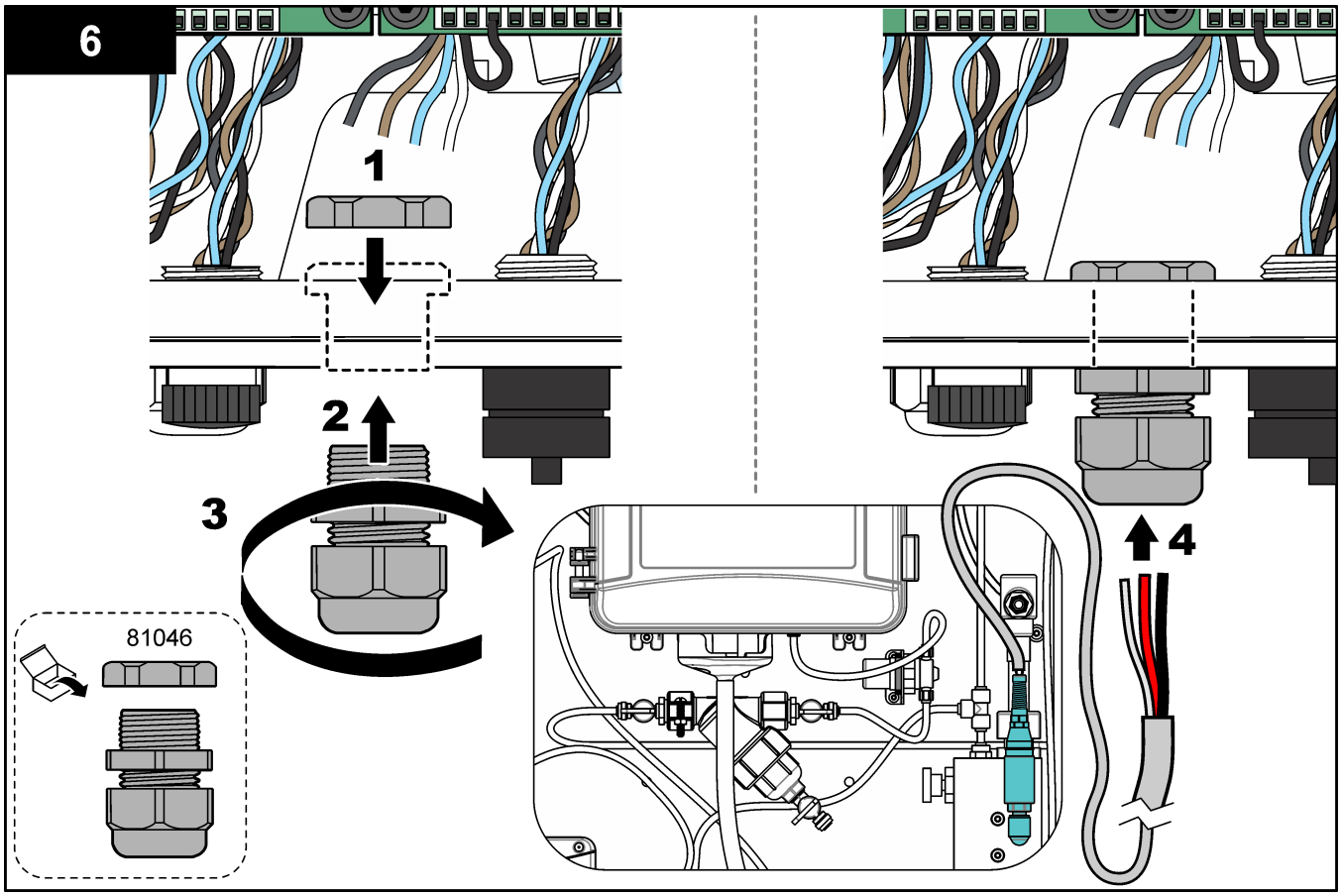
6
1
2
3
4
81046

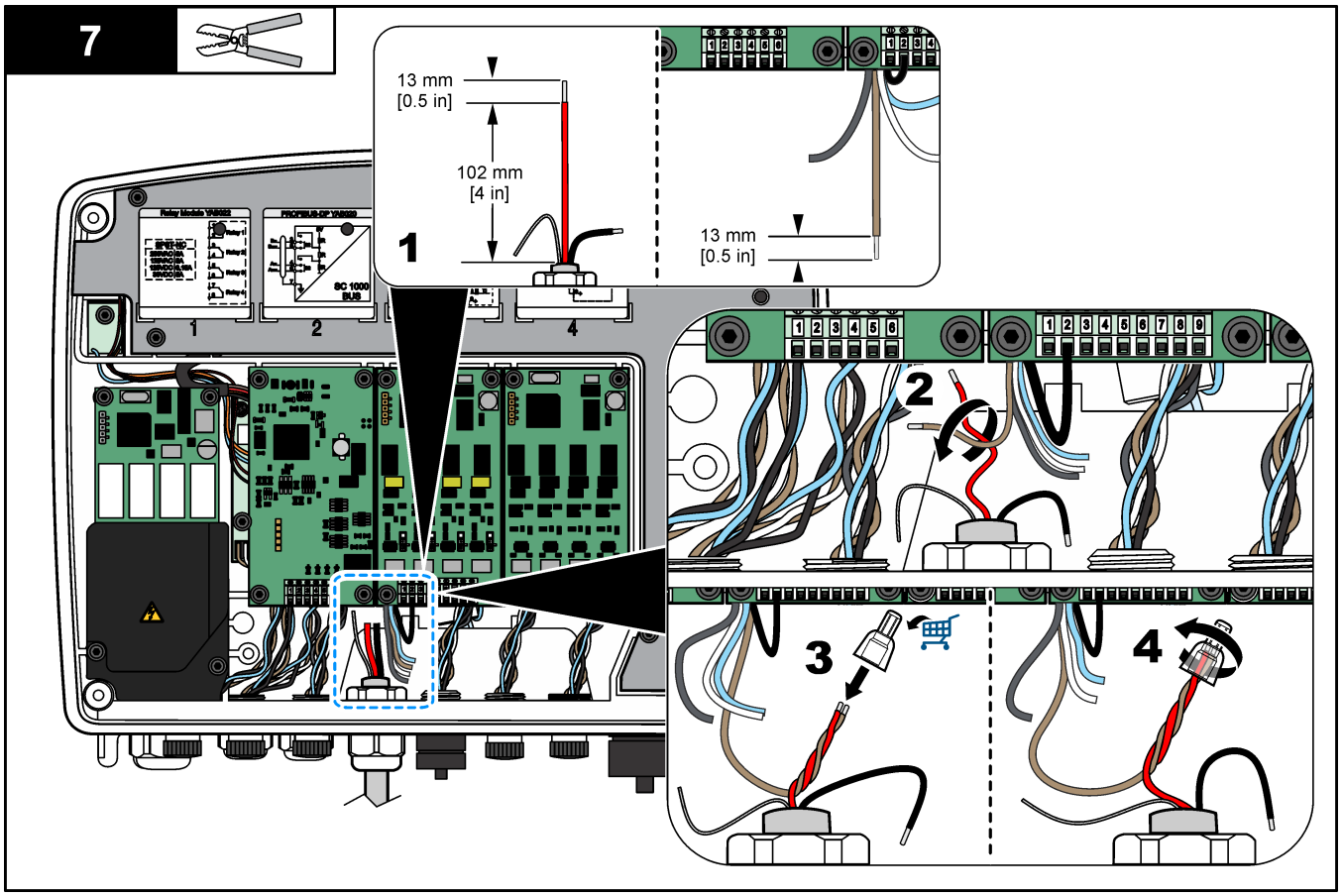
7
13 mm
[0.5 in]
102 mm
[4 in]
1
13 mm
[0.5 in]
2
3
4

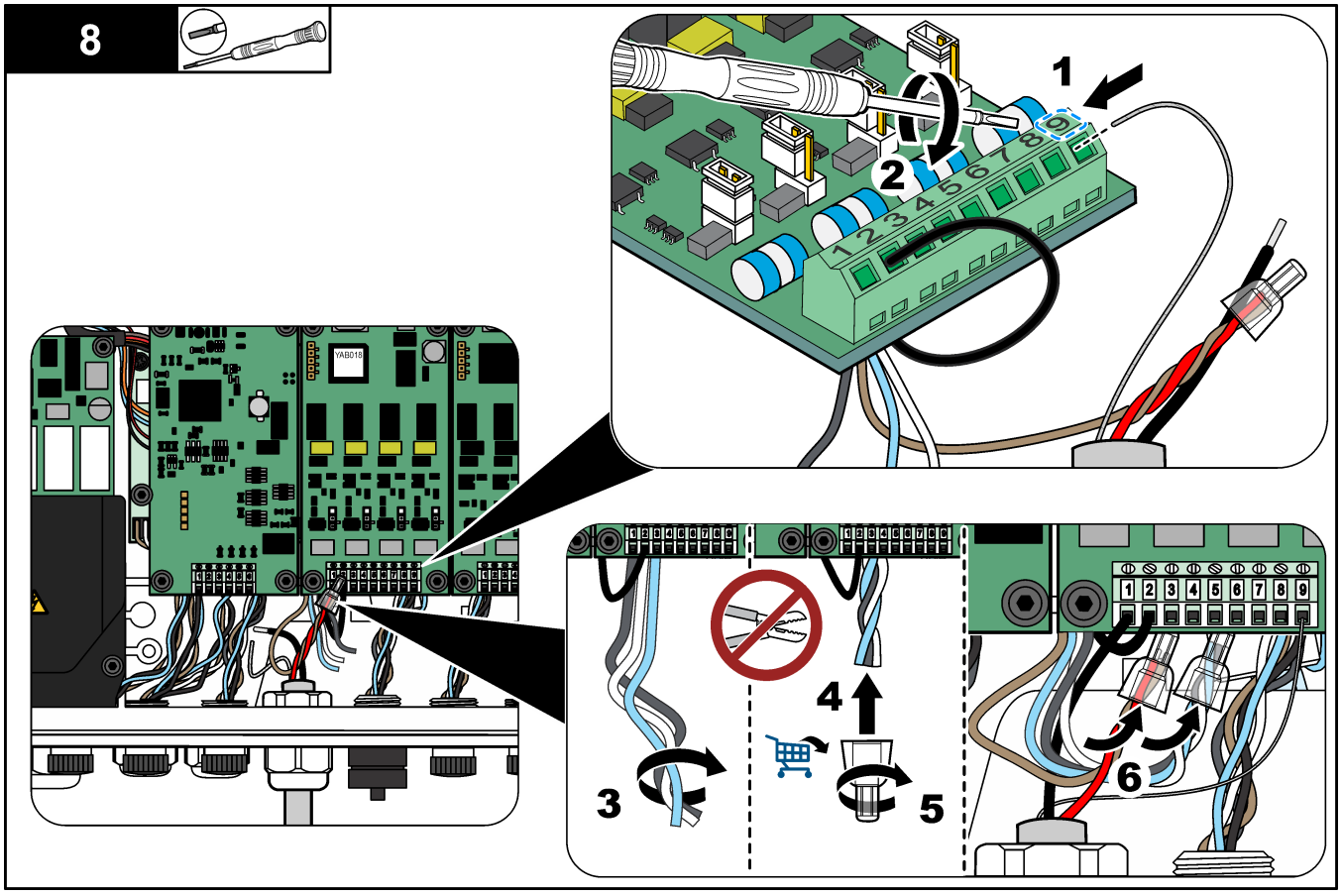
8
1
2
3
4
5
6

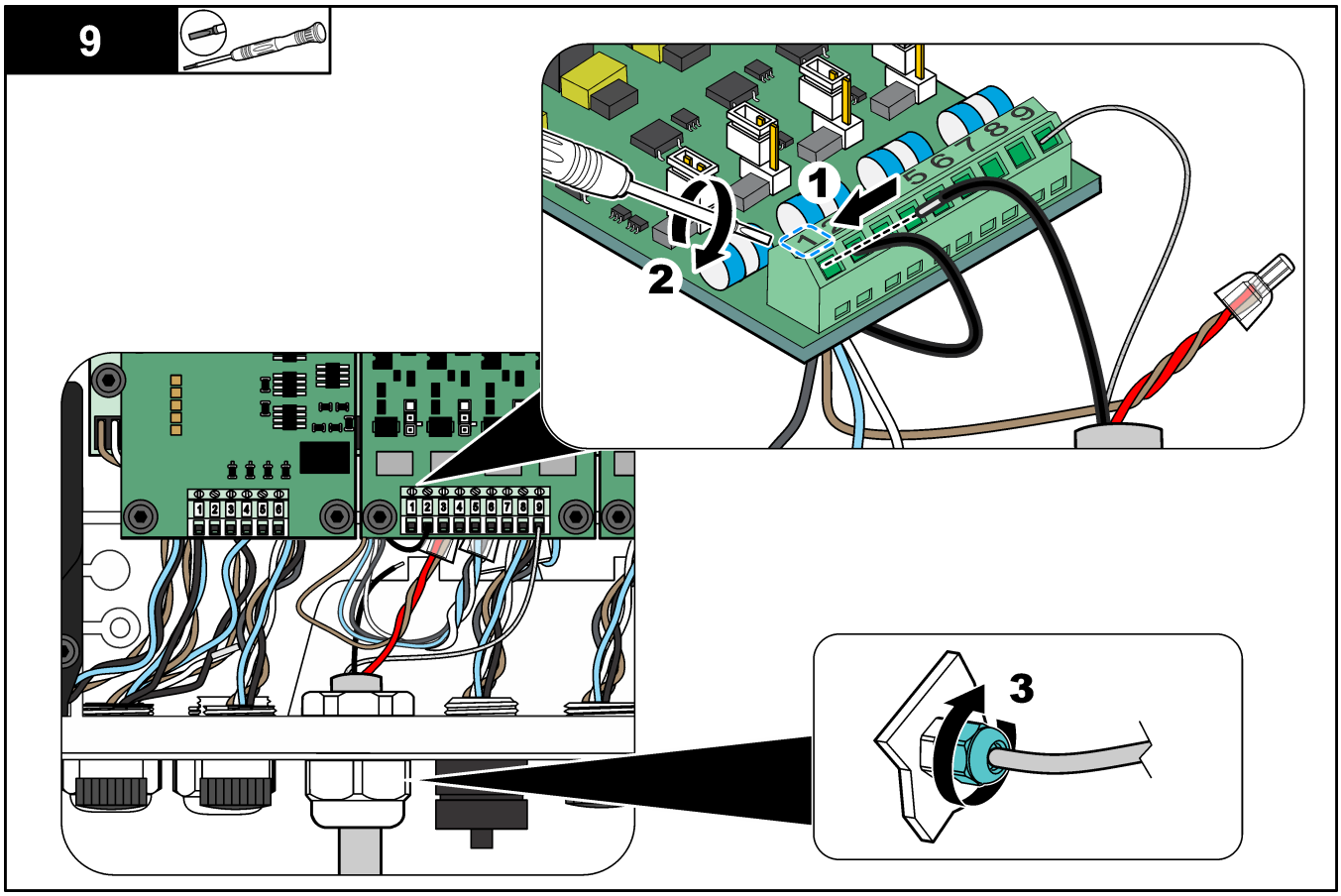
9
1
2
3

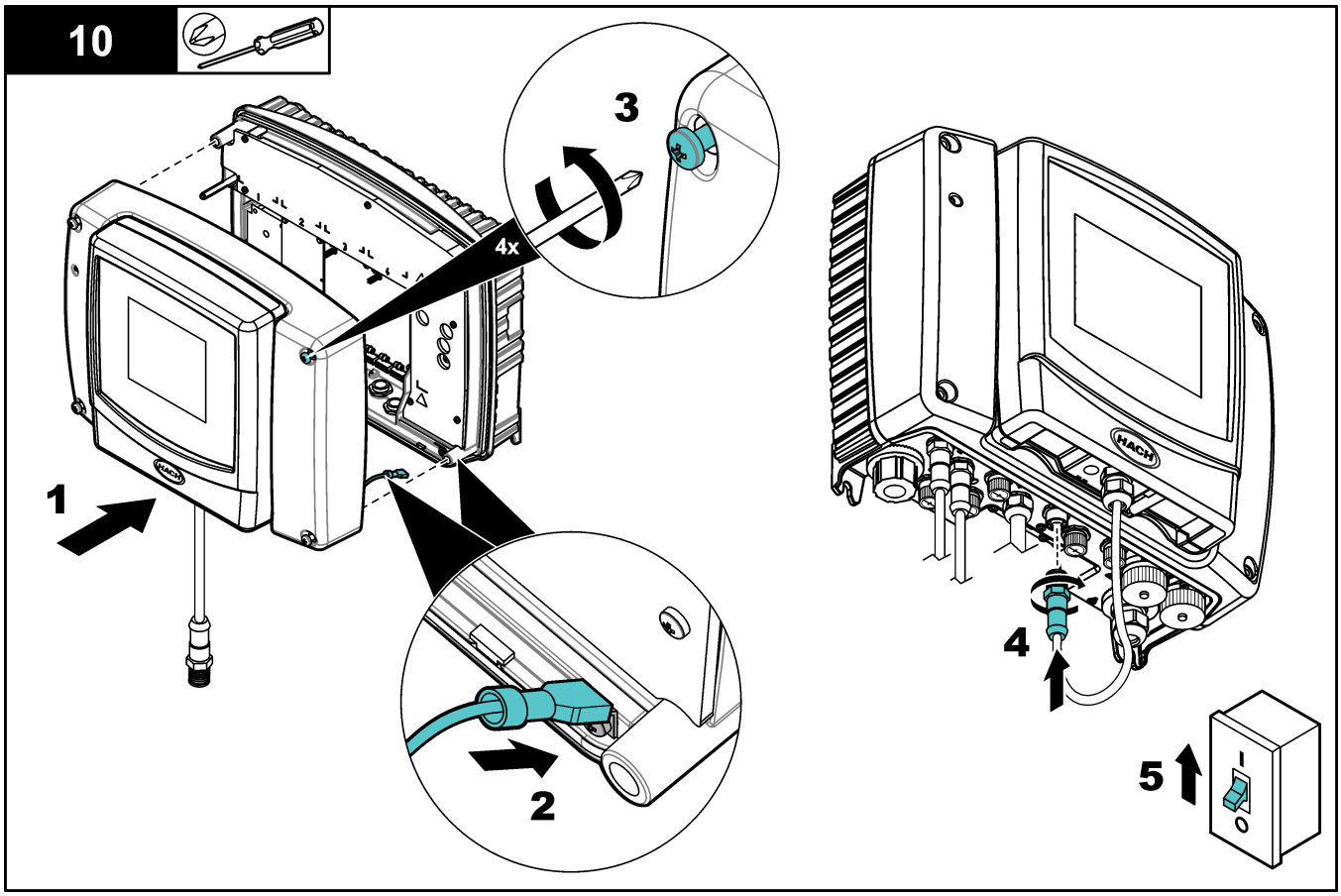
10
3
4x
1
2
4
5
HACH

## 2.4.2 Install the ACM on the turbidimeter

If the panel includes the Automatic Cleaning Module (ACM), install the ACM with the panel in a horizontal position before the panel is mounted vertically on a wall. Refer to Figure 6.

**Figure 6 Install the ACM on the turbidimeter**

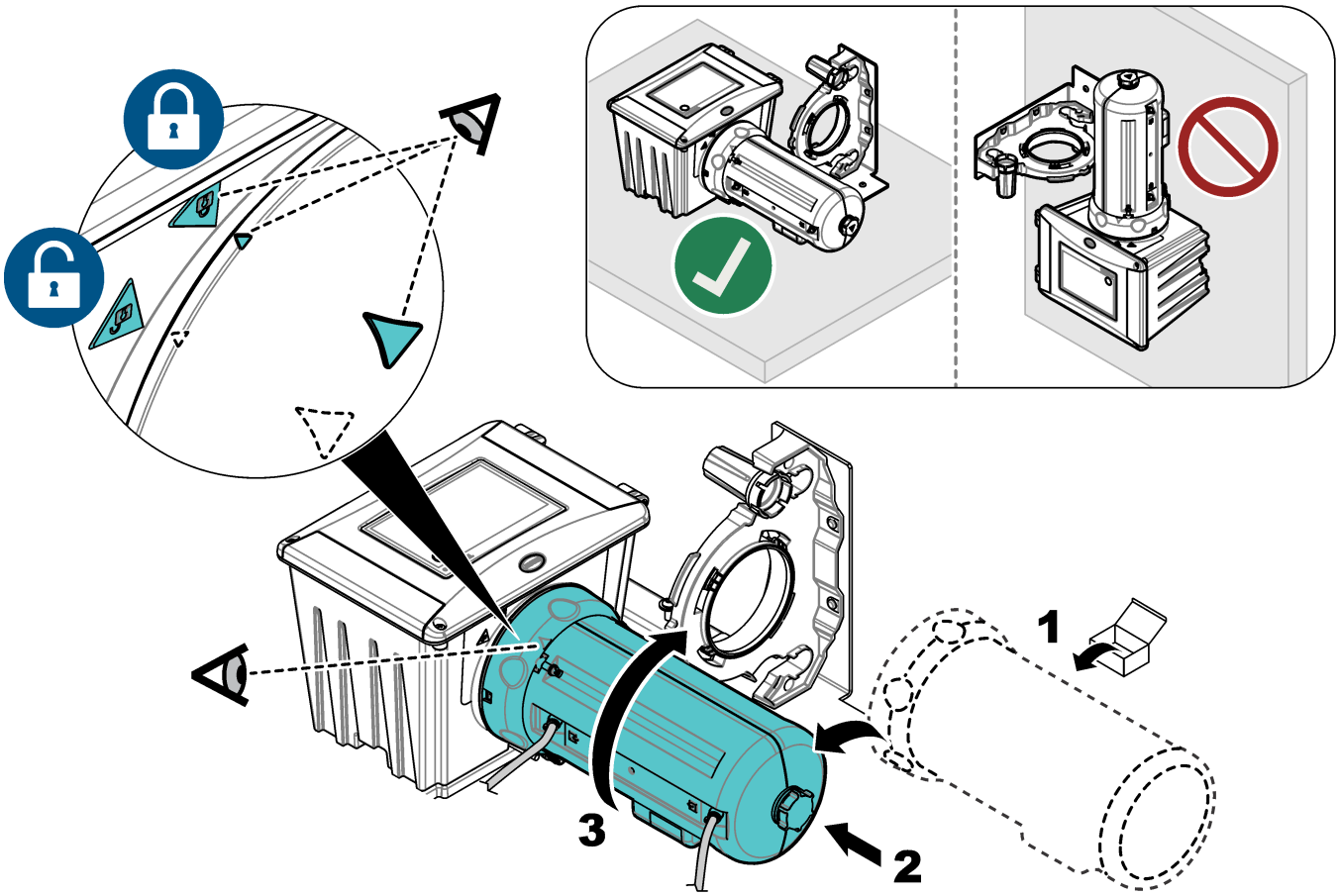


## 2.4.3 Mounting

**⚠WARNING**

Personal injury hazard. Make sure that the wall mounting is able to hold 4 times the weight of the equipment.

**⚠WARNING**

Personal injury hazard. Instruments or components are heavy. Use assistance to install or move.

Attach the panel on a flat, vertical wall surface in an indoor location away from direct sunlight. Install the instrument in a location and position where the user can easily disconnect the instrument from the power source.

Refer to Figure 7 for product dimensions. The dimensions are approximately the same for the six panels. Refer to Figure 8 to attach the panel to a wall. Mounting hardware is supplied by the user.

**Figure 7 Product dimensions**

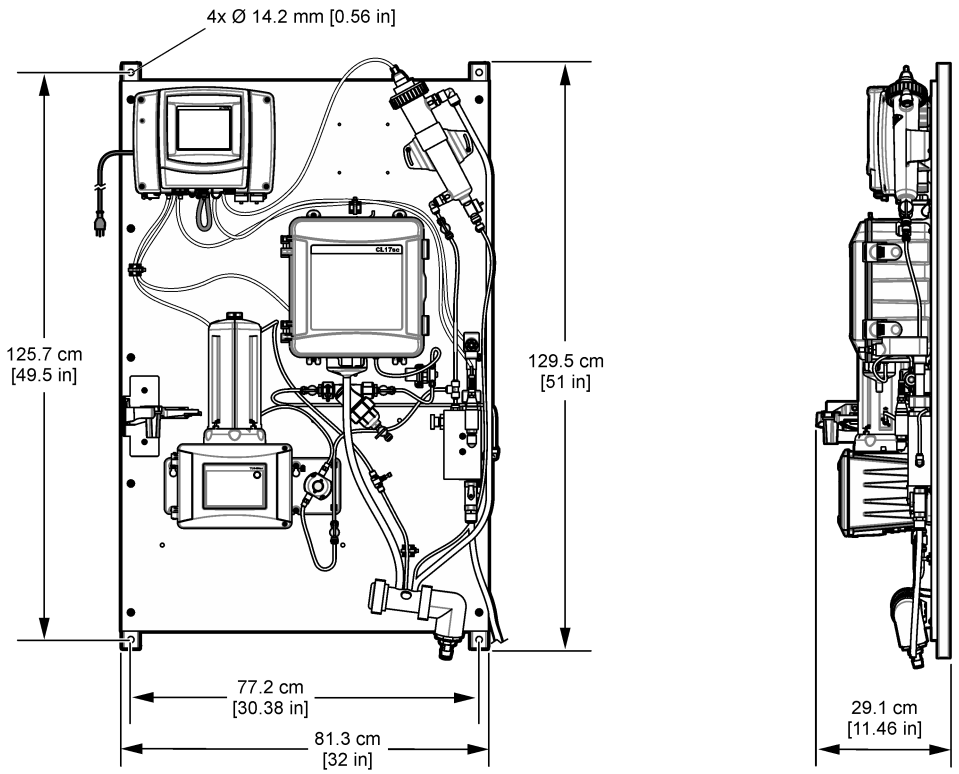


**Figure 8 Hang the panel on a wall**

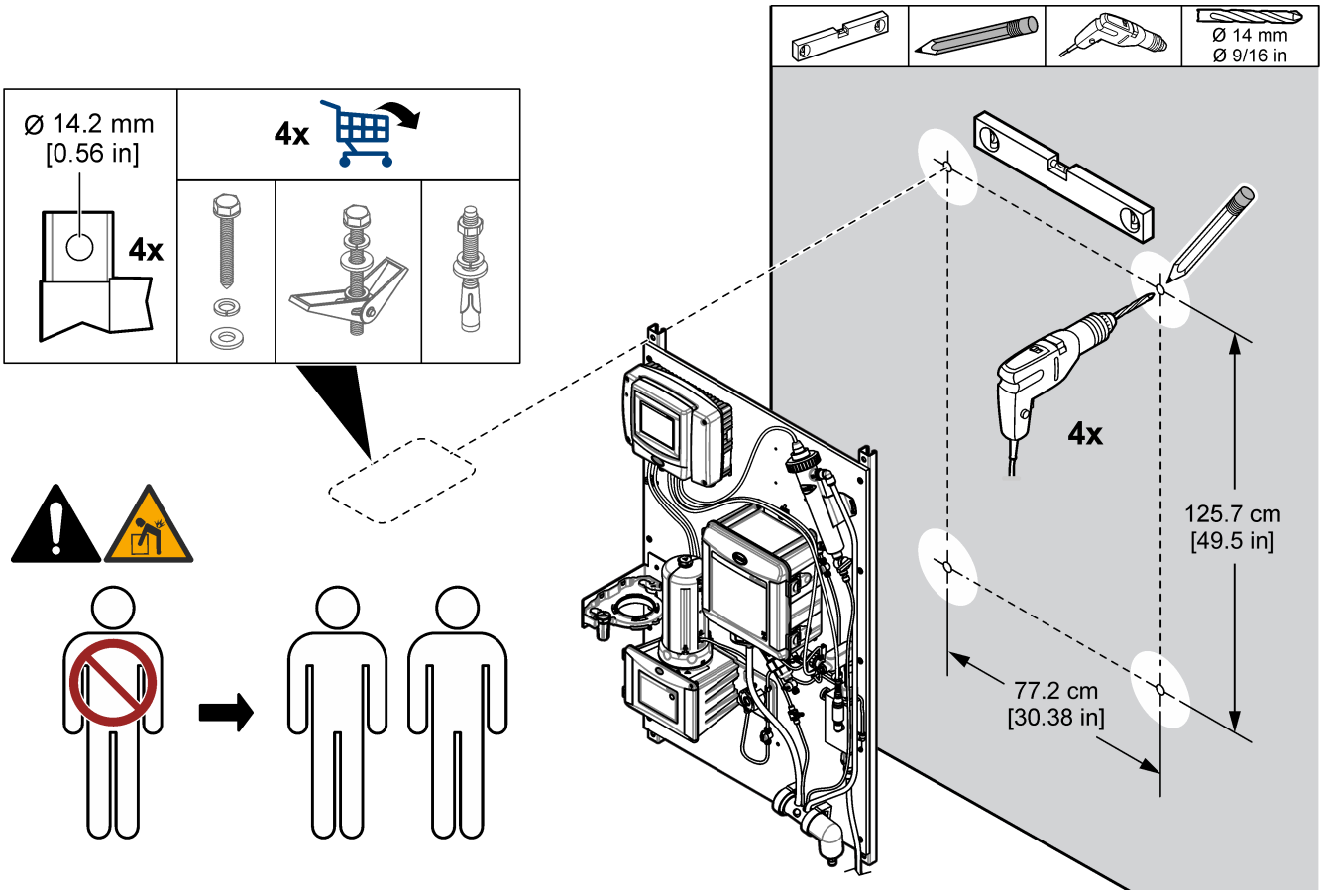

## 2.4.4 Install the sample and drain lines

Install the sample and drain tubing as shown in Figure 9. Make sure that the drain tubing has a constant downward slope to the external drain.

**Figure 9 Sample and drain connections**

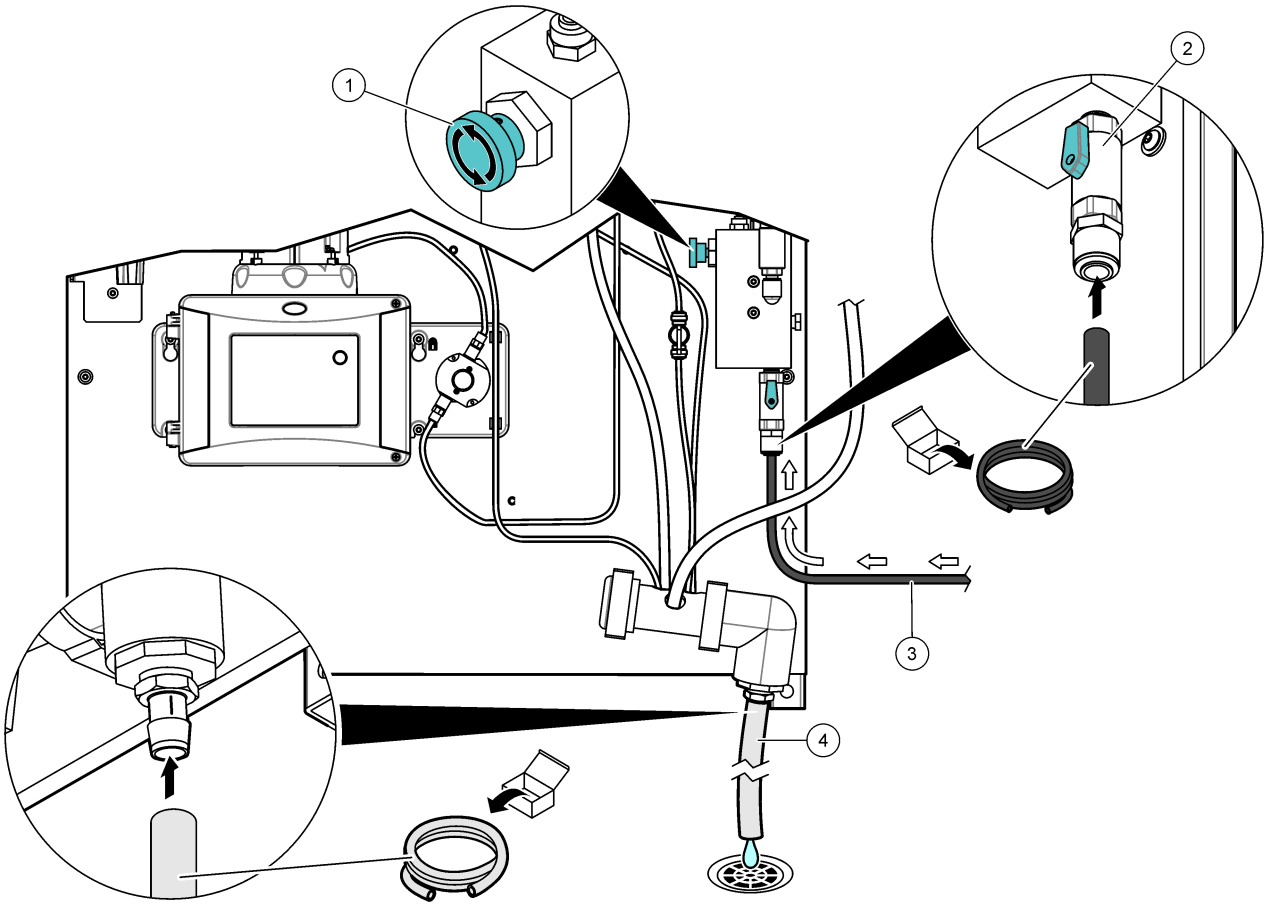


| | |
|---|---|
| **1** Inlet needle valve | **3** Sample tubing |
| **2** Inlet ball valve | **4** Drain tubing |

### 2.4.5 Remove the cap from the pH sensor

Remove the protective cap from the pH sensor before startup. Refer to Figure 10.

***Note:*** *During cold weather, the manufacturer may send the pH sensor in a different package.*

**Figure 10 Remove the cap from the pH sensor**

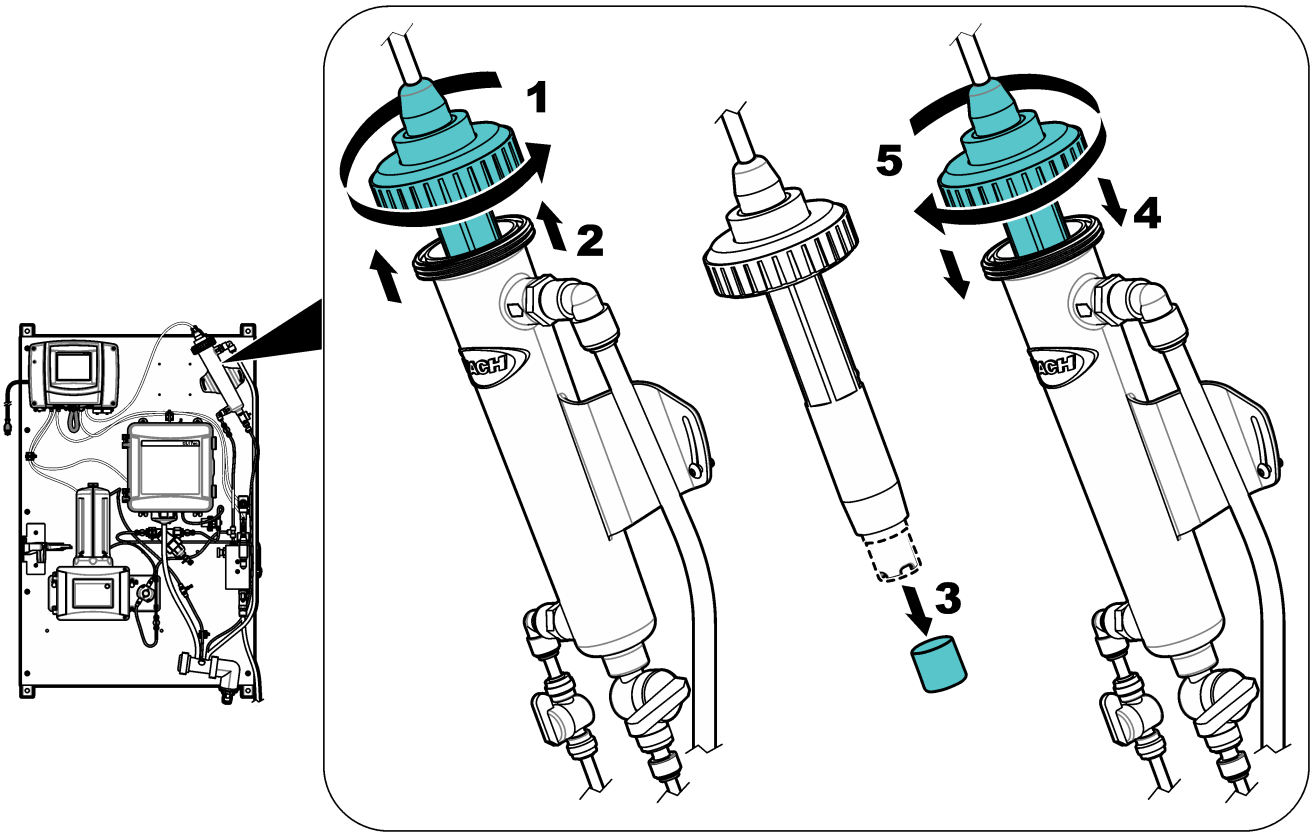


## 2.5 Startup

Make sure that all of the plumbing connections are complete before startup.

1. For panels with the CL17sc chlorine analyzer, install the reagents and the stir bar. Refer to the CL17sc chlorine analyzer user manual.
2. For panels with the CLF10 or CLT10 sc chlorine analyzer, fill the membrane cap with electrolyte. Refer to the user manual for the CLF10 or CLT10 sc chlorine analyzer.
3. Open the sample inlet valve to let sample flow through the plumbing system. Make sure that the flow rate and pressure are within the limits. Refer to Specifications on page 12.
4. Examine the plumbing for fluid leaks. Stop the leaks if found.
5. Apply power to the controller. Refer to Figure 11. The display light comes on. The connected sensors show on the display.

   ***Note:*** *To supply AC power to the controller with conduit, refer to the controller user manual.*
6. If the panel came without a controller, set a name for the pressure sensor as follows:
   a. From the main menu, select **SC1000 SETUP** > **CURRENT INPUTS** > **mA INPUT INT** and select **CURRENT INPUT 1**.
   b. Go to **EDIT NAME** and enter PRESSURE.
7. For panels with the CL17sc chlorine analyzer, start the prime operation for the reagents. Refer to the CL17sc chlorine analyzer user manual for instructions.

8. For panels with the CLF10 or CLT10 sc chlorine analyzer, calibrate the sensor. Refer to the user manual for the CLF10 or CLT10 sc chlorine analyzer.
9. Calibrate the turbidimeter, the pH sensor and the conductivity sensor. Refer to the supplied user manuals for calibration instructions.
10. Let the panel operate for 4 to 6 hours until the measurements become stable.

**Figure 11 Apply power**

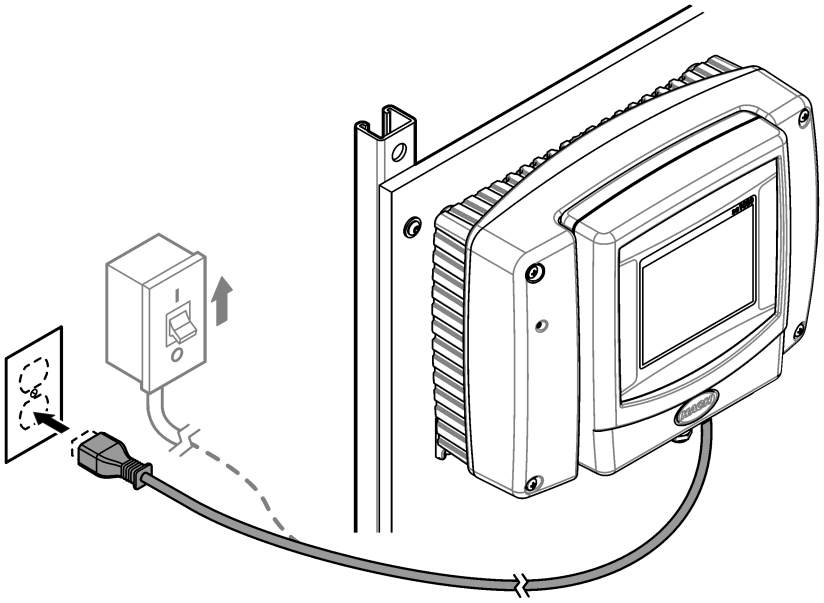

## 2.6 Operation

After the startup procedure is complete and the measurements are stable, monitor the measurements regularly. Measure grab samples and calibrate the analyzers and sensors regularly to make sure that the measurements are accurate. Refer to the user manual of each device for calibration instructions.

## 2.7 Replacement parts and accessories

***Note:*** *Product and Article numbers may vary for some selling regions. Contact the appropriate distributor or refer to the company website for contact information.*

| Description | Item no. |
|---|---|
| O-ring, 1.475-inch ID, 0.21-inch width | 6849000 |
| Pressure sensor | 6842600 |
| Pressure regulator | 6846600 |
| Tubing, drain, ¾-inch ID × 1-inch OD | 5994800 |
| Tubing, sample, 0.375-inch ID × 0.500-inch OD | 5115900 |
| Tubing, 0.170-inch ID × 0.250-inch OD | 3061600A |

# Section 3 WQMP

## 3.1 Product overview

The Water Quality Monitoring Panel (WQMP) has a flow channel that holds water quality sensors that continuously monitor water quality parameters. The flow channel is pre-assembled on the panel with most electrical and plumbing connections installed at the factory. The user must make electrical connections on the panels that ship without the controller (8828000NC). Refer to Figure 12 or Figure 13, and Table 4.

The user can add a maximum of six sensors (with applicable adapters). Each sensor receives a direct flow of sample through the tee fittings in the sample line. Automatic valves (or manual valves on the 115031) operate to flush the flow channel with clean water at regular intervals. The controller on the panel sends the data to a communications network for remote monitoring.

**Figure 12 8828000, 8828000NC overview**

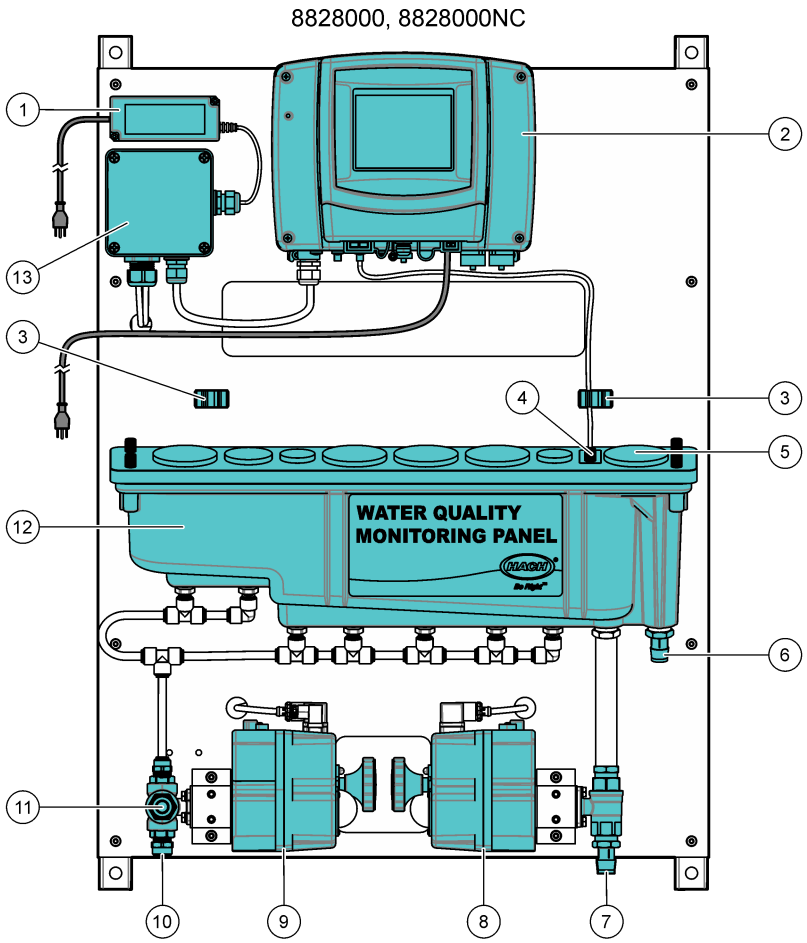


| | |
|---|---|
| **1** AC/DC power supply | **8** Two-way automatic drain valve |
| **2** SC1000 Controller | **9** Three-way automatic inlet valve |
| **3** Gateway holder (2x) | **10** Sample inlet, ½-inch OD tubing |
| **4** Level sensor | **11** Flush inlet, ¾–inch GHT socket |
| **5** View port | **12** Flow channel with small (2x), medium (1x) and large (4x) ports |
| **6** Sample drain, ¾–inch ID tubing | **13** Power junction box for automated valves |
| **7** Flush drain, ¾–inch ID tubing | |

**Figure 13 115031 overview**

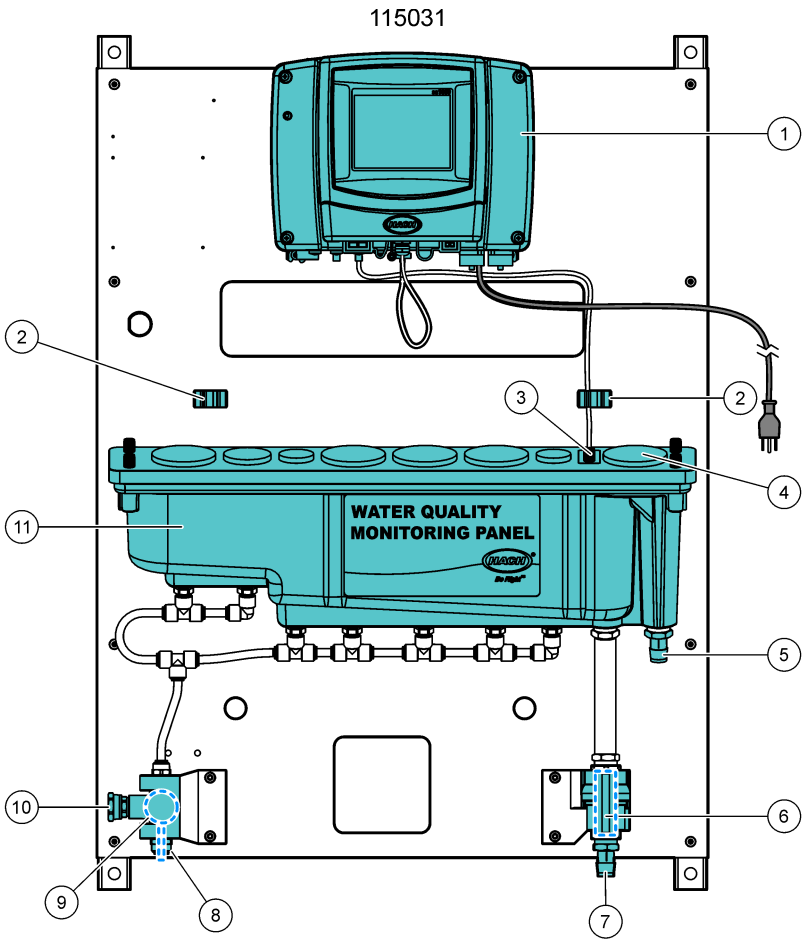


| | |
|---|---|
| **1** SC1000 Controller | **7** Flush drain, ¾–inch ID tubing |
| **2** Gateway holder (2x) | **8** Sample inlet, ½-inch OD tubing |
| **3** Level sensor | **9** Three-way manual inlet valve |
| **4** View port | **10** Flush inlet, ¾–inch GHT socket |
| **5** Sample drain, ¾–inch ID tubing | **11** Flow channel with small (2x), medium (1x) and large (4x) ports |
| **6** Two-way manual drain valve | |

**Table 4 WQMP part numbers**

| Part number | Description |
|---|---|
| 8828000 | WQMP with the SC1000 Controller and automated inlet/drain valves |
| 8828000NC | WQMP without the SC1000 Controller and automated inlet/drain valves |
| 115031 | WQMP with the SC1000 Controller and manual inlet/drain valves |

## 3.2 Specifications

Specifications are subject to change without notice. The specifications that follow are for the WQMP panel. Refer to the instrument user manuals for the controller and sensor specifications.

| Specification | Details |
|---|---|
| Dimensions (W x H x D) | 72.6 x 101.6 x 21 cm (28.6 x 40 x 8.3 inch) |
| Weight | 8828000, 8828000NC: 39.5 kg (87 lb) with controller<br>115031: 24.9 kg (54.9 lb) with controller |
| Power requirements | SC1000 Controller: 100–240 (±10) VAC, 50/60 Hz; maximum 1000 VA |
| | 8828000, 8828000NC: OWA-60U-24 power supply: 100–240 VAC ±10%, 50/60 Hz; maximum 2.5 A (8828000, 8828000NC only) |
| Sample flow rate | 5 L/minute (1.3 gallons/minute) maximum |
| Flush flow rate | 20 L/minute (5.3 gallons/minute) maximum |
| Sample pressure | 138 to 517 kPa (20 to 75 psi) |
| Sample inlet connection | ½-inch OD tube |
| Sample waste drain connection | ¾-inch ID hose barb |
| Certifications | SC1000 Controller is CE compliant and is TÜV listed to UL and CSA safety standards |
| | 8828000, 8828000NC: OWA-60U-24 power supply is UL listed to UL and CSA standards |

## 3.3 Product components

Make sure that all components have been received. Refer to Figure 14 or Figure 15. If any items are missing or damaged, contact the manufacturer or a sales representative immediately.

**Figure 14 8828000, 8828000NC components**

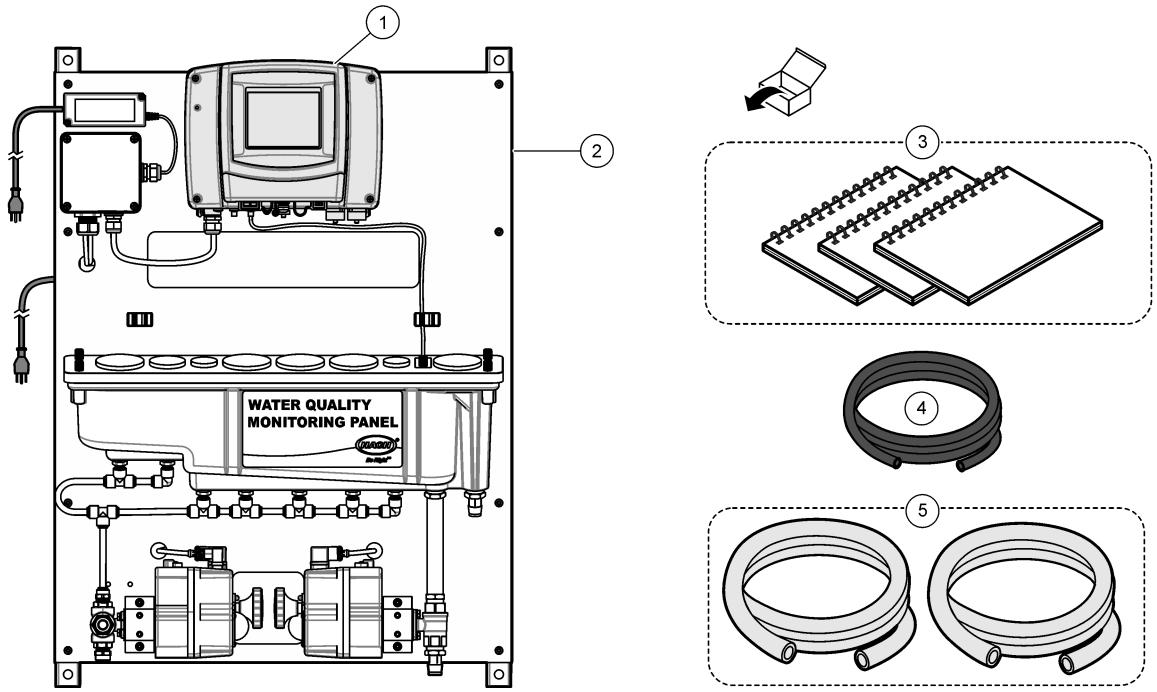


| | | |
|---|---|---|
| **1** SC1000 Controller (not included with 8828000NC) | **3** User manuals | **5** Tubing, drain, ¾-inch ID × 1-inch OD, 1.8 m (6 ft) (2x) |
| **2** WQMP | **4** Tubing, sample, 0.375-inch ID × 0.500-inch OD, 1.8 m (6 ft) | |

**Figure 15 115031 components**

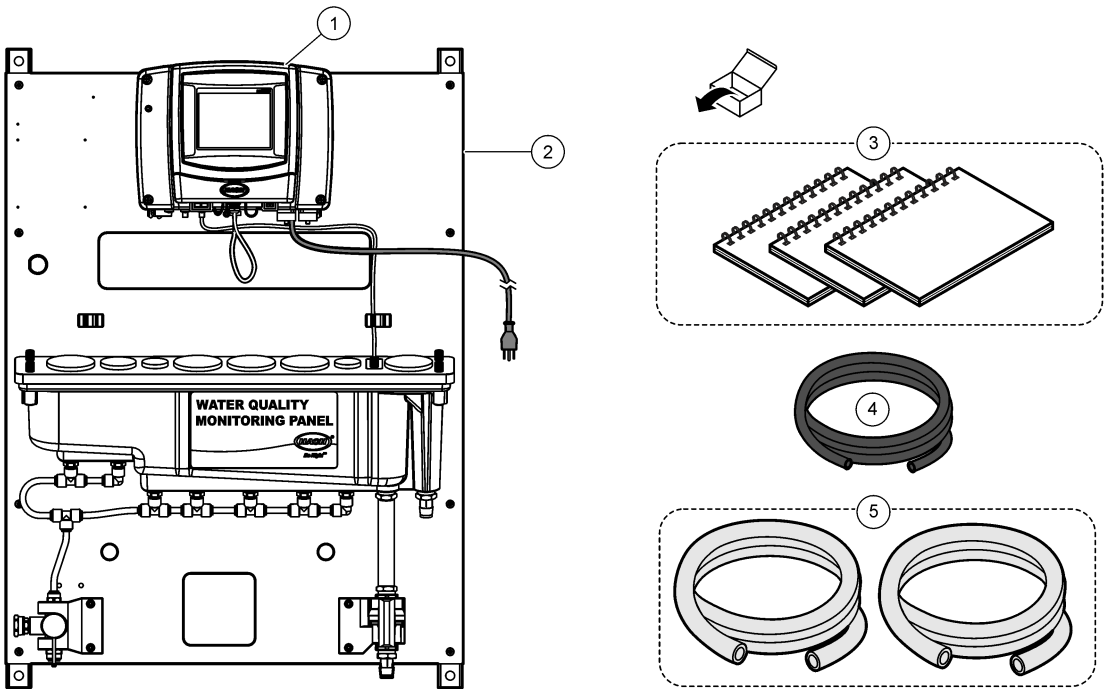


| | | |
|---|---|---|
| **1** SC1000 Controller | **3** User manuals | **5** Tubing, drain, ¾-inch ID × 1-inch OD, 1.8 m (6 ft) (2x) |
| **2** WQMP | **4** Tubing, sample, 0.375-inch ID × 0.500-inch OD, 1.8 m (6 ft) | |

## 3.4 Installation

**⚠WARNING**

Multiple hazards. Only qualified personnel must conduct the tasks described in this section of the document.

### 3.4.1 Install the SC1000 Controller (if applicable)

**⚠DANGER**

Electrocution hazard. Always remove power to the instrument before making electrical connections.

The user must install an SC1000 Controller on the WQMP panel that ships without a controller (8828000NC). Mount the controller and make the electrical connections as follows:


- Attach the controller to the panel on page 32
- Install the junction box and level sensor on page 33

### 3.4.1.1 Attach the controller to the panel

The SC1000 Controller probe module has four mounting holes that align with four mounting bolts on the panel. Refer to Figure 4 to attach the controller to the panel.

**Figure 16 Attach the SC1000 Controller to the panel**

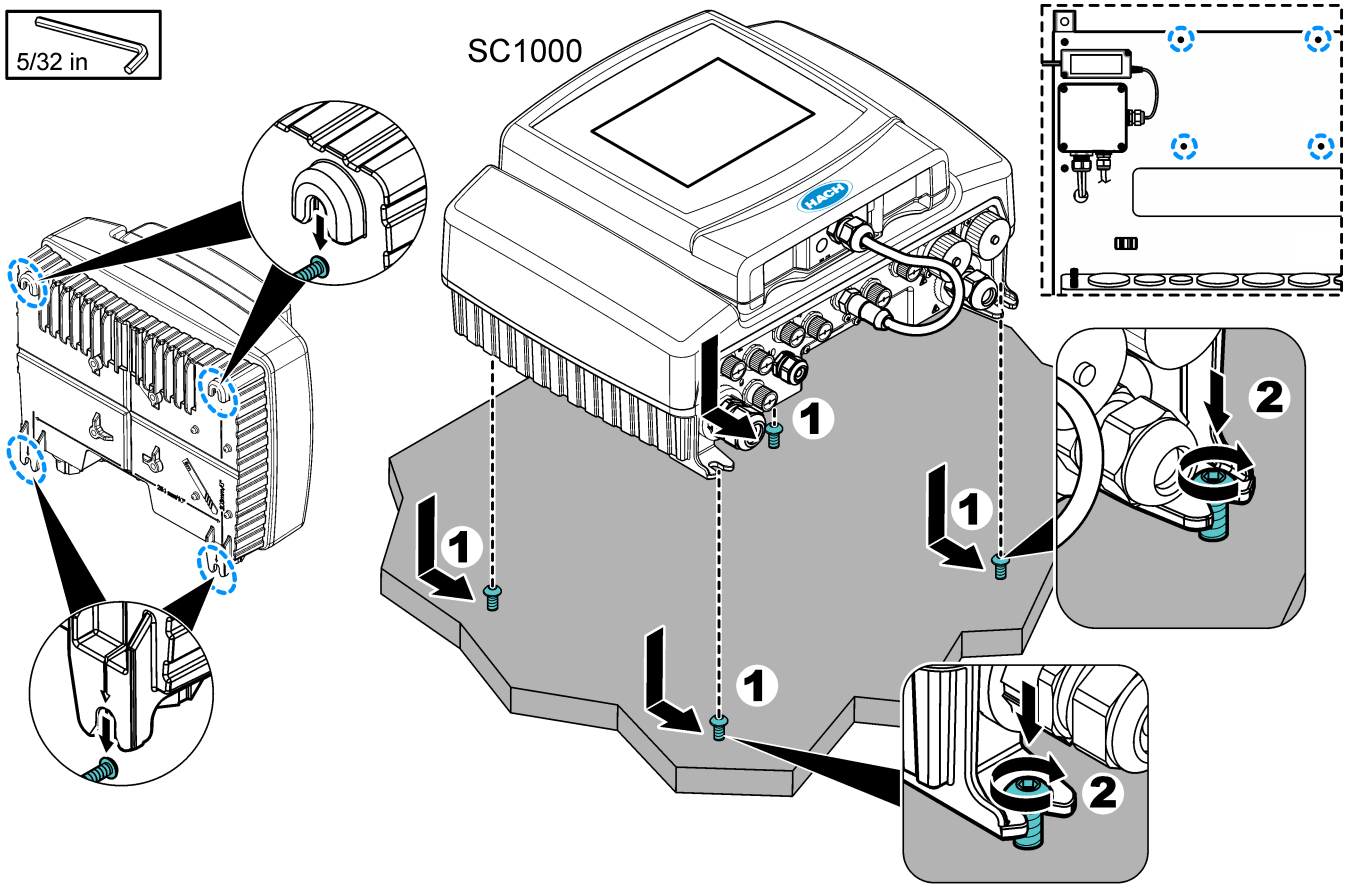

### 3.4.1.2 Install the junction box and level sensor

Refer to the illustrated steps that follow to install the wires from the junction box and the level sensor in the SC1000 Controller. During startup, make sure to configure the level sensor. Refer to Startup on page 43.

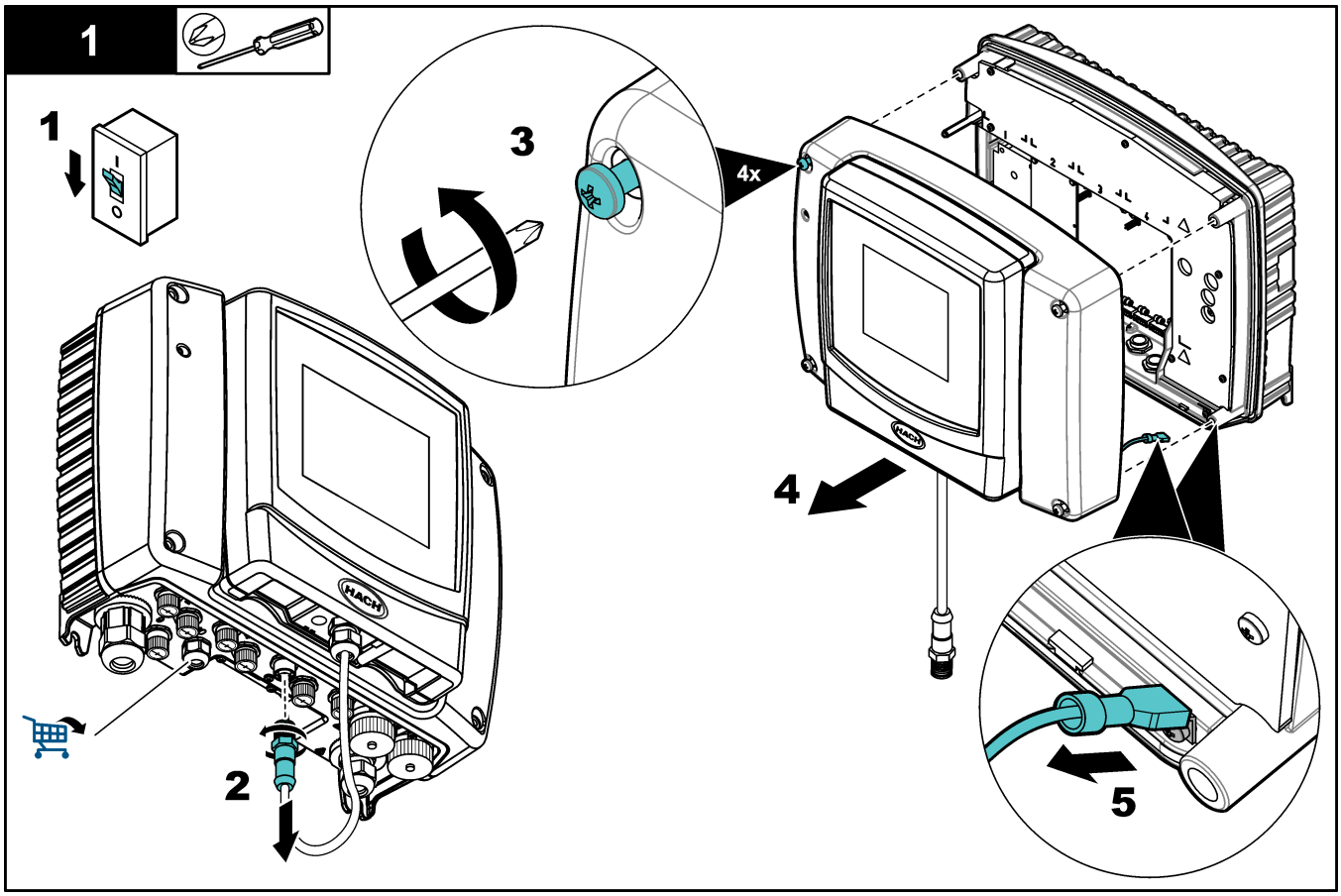

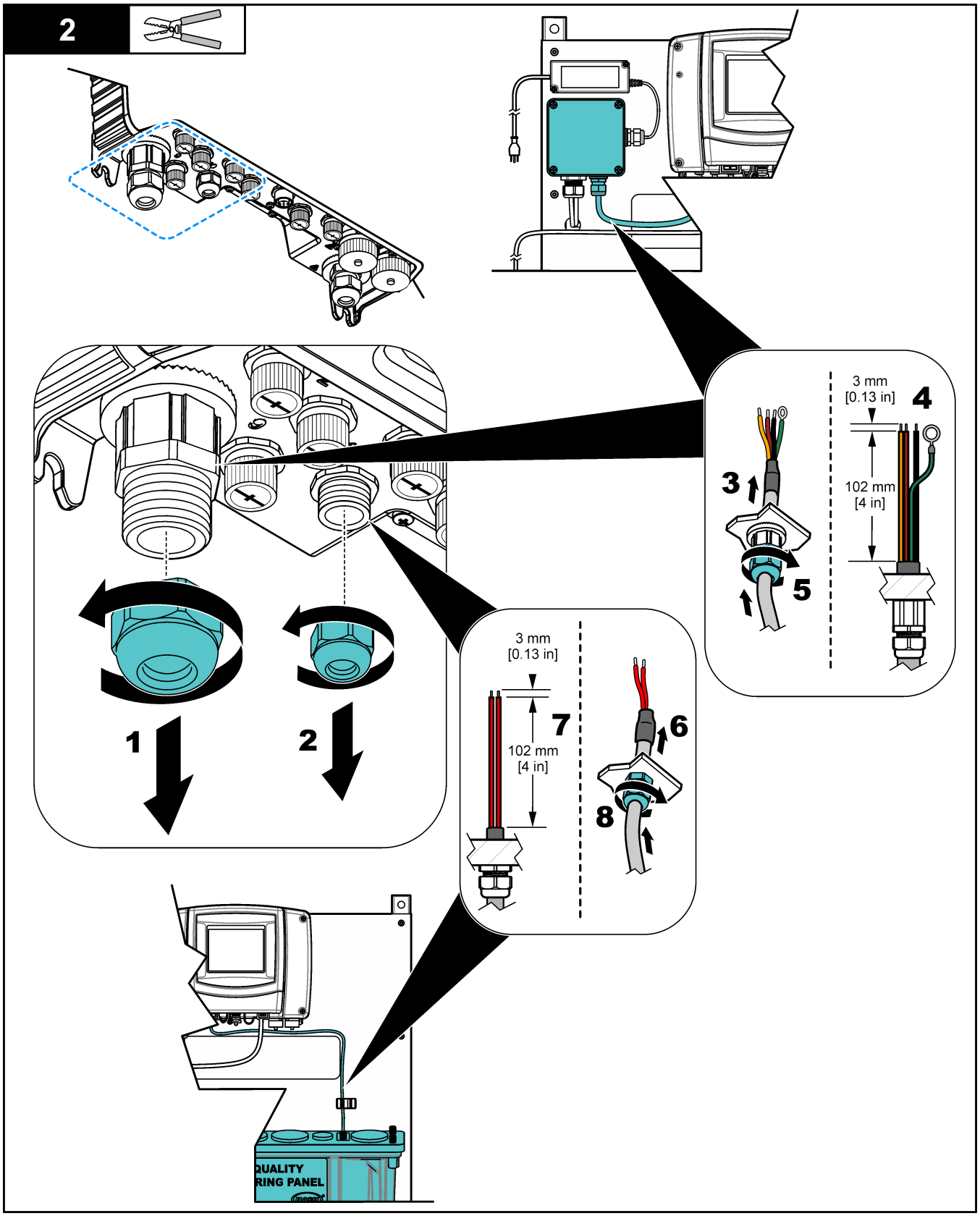
2
3 mm
[0.13 in]
4
102 mm
[4 in]
3
5
1
2
3 mm
[0.13 in]
7
102 mm
[4 in]
6
8
QUALITY
RING PANEL

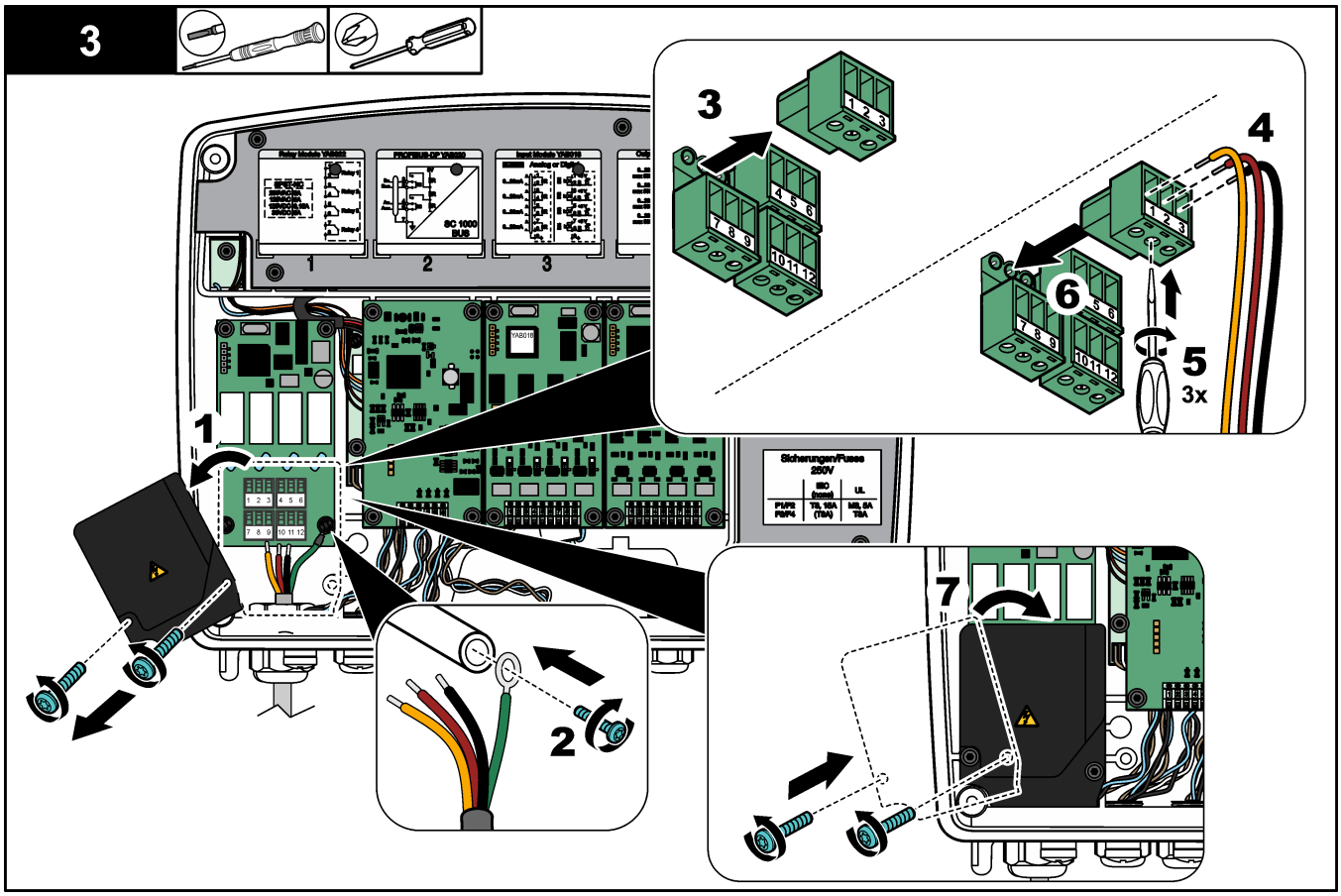
3
1
2
3
4
5
3x
6
7

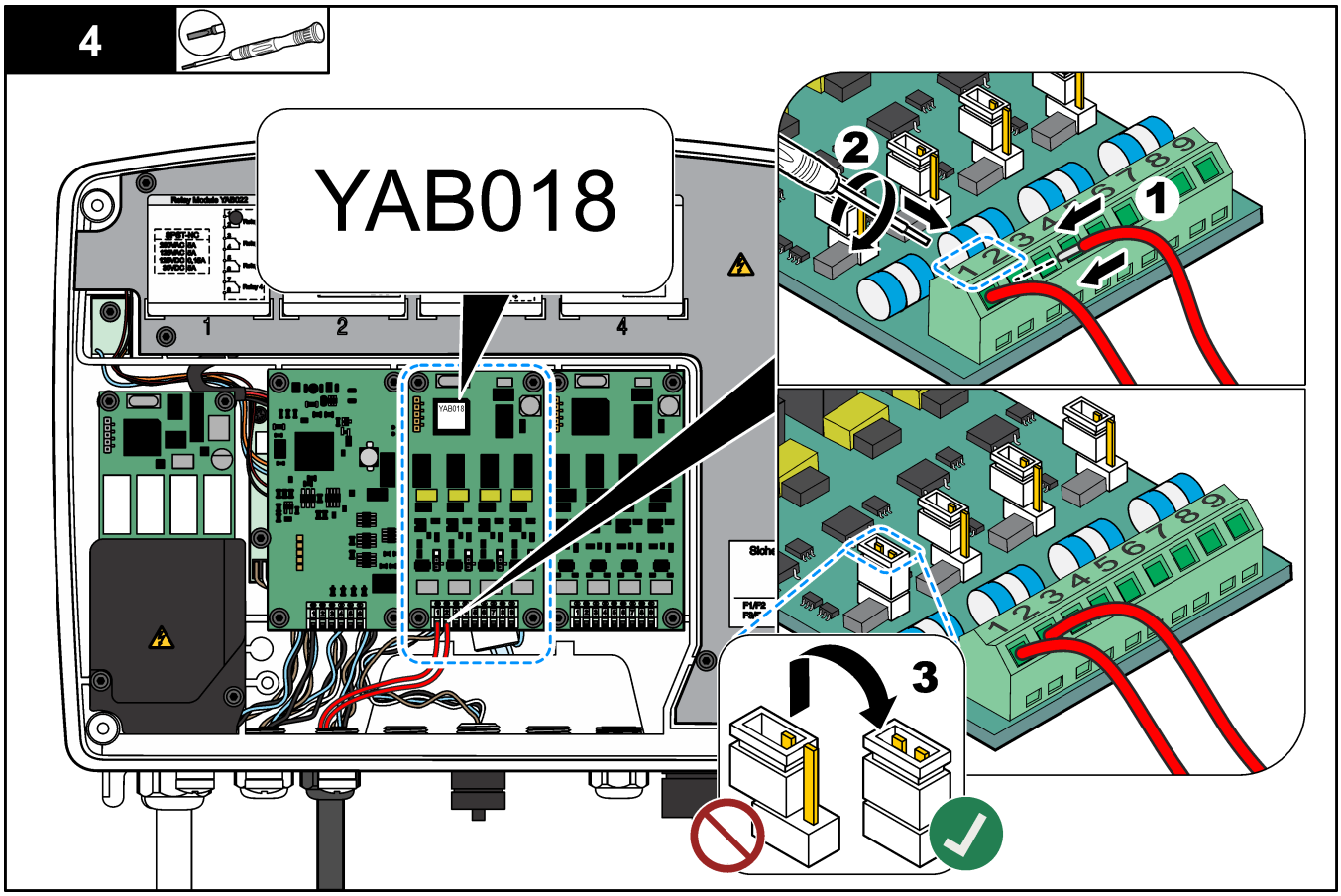
4
YAB018
1
2
3

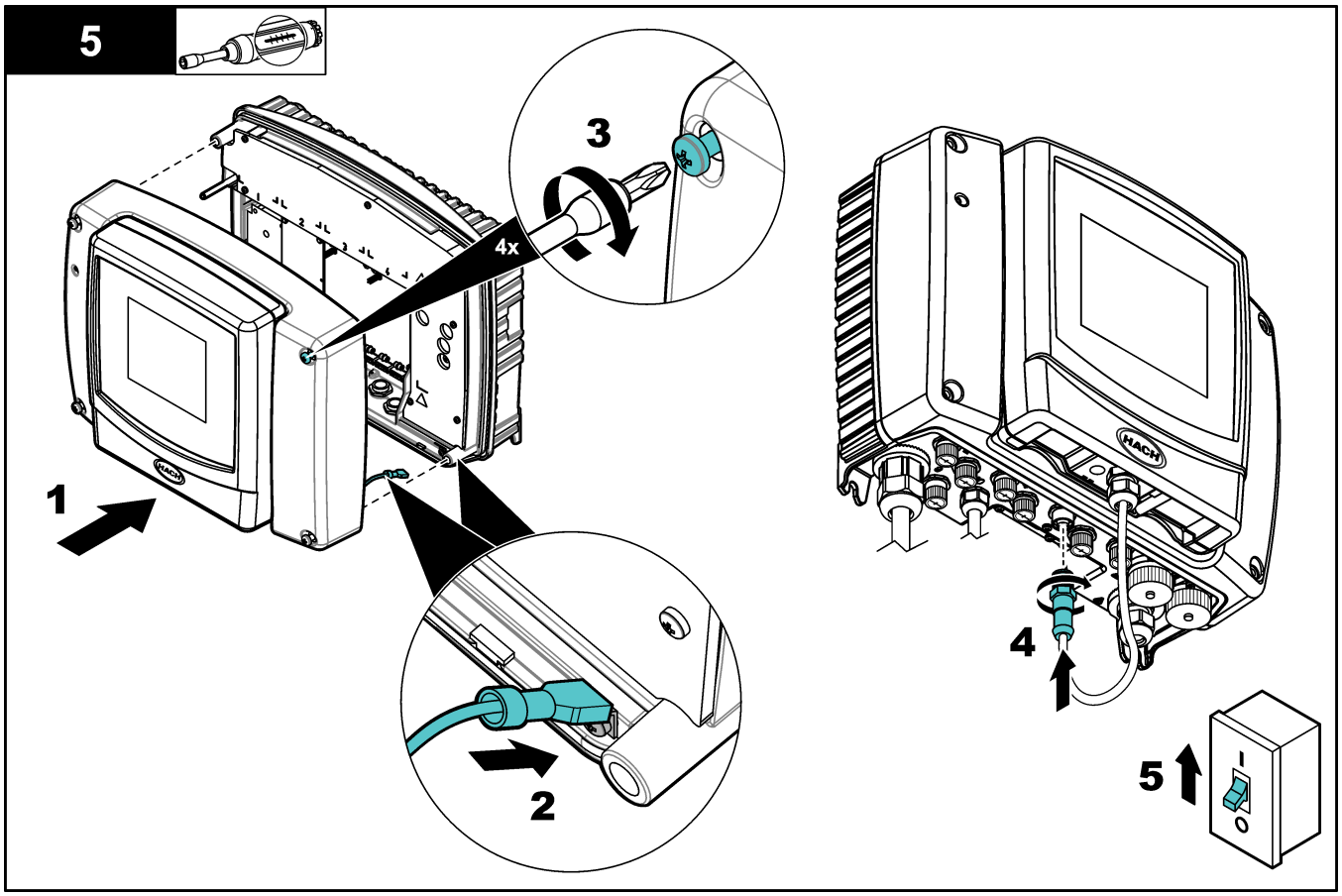


### 3.4.2 Mounting

**⚠WARNING**

Personal injury hazard. Make sure that the wall mounting is able to hold 4 times the weight of the equipment.

**⚠WARNING**

Personal injury hazard. Instruments or components are heavy. Use assistance to install or move.

Attach the panel on a flat, vertical wall surface in an indoor location away from direct sunlight. Install the instrument in a location and position where the user can easily disconnect the instrument from the power source.

For the product dimensions, refer to Figure 17 or Figure 19.

Attach the panel to a wall. Refer to Figure 18 or Figure 20.

Mounting hardware is supplied by the user.

**Figure 17 8828000, 8828000NC dimensions**

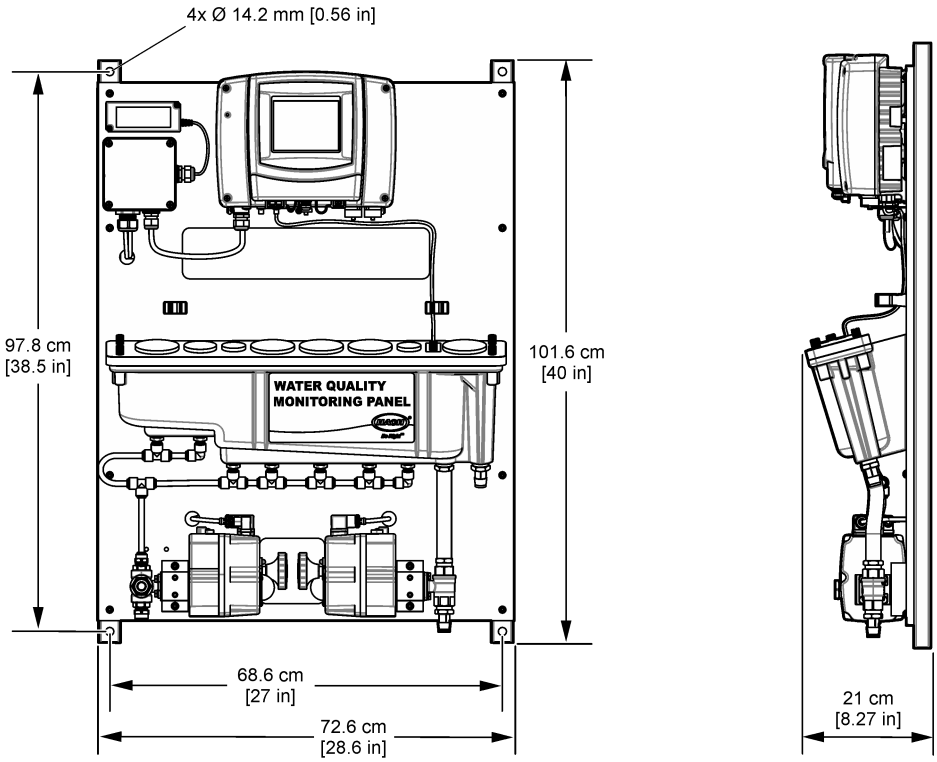


**Figure 18 8828000, 8828000NC—Hang the panel on a wall**

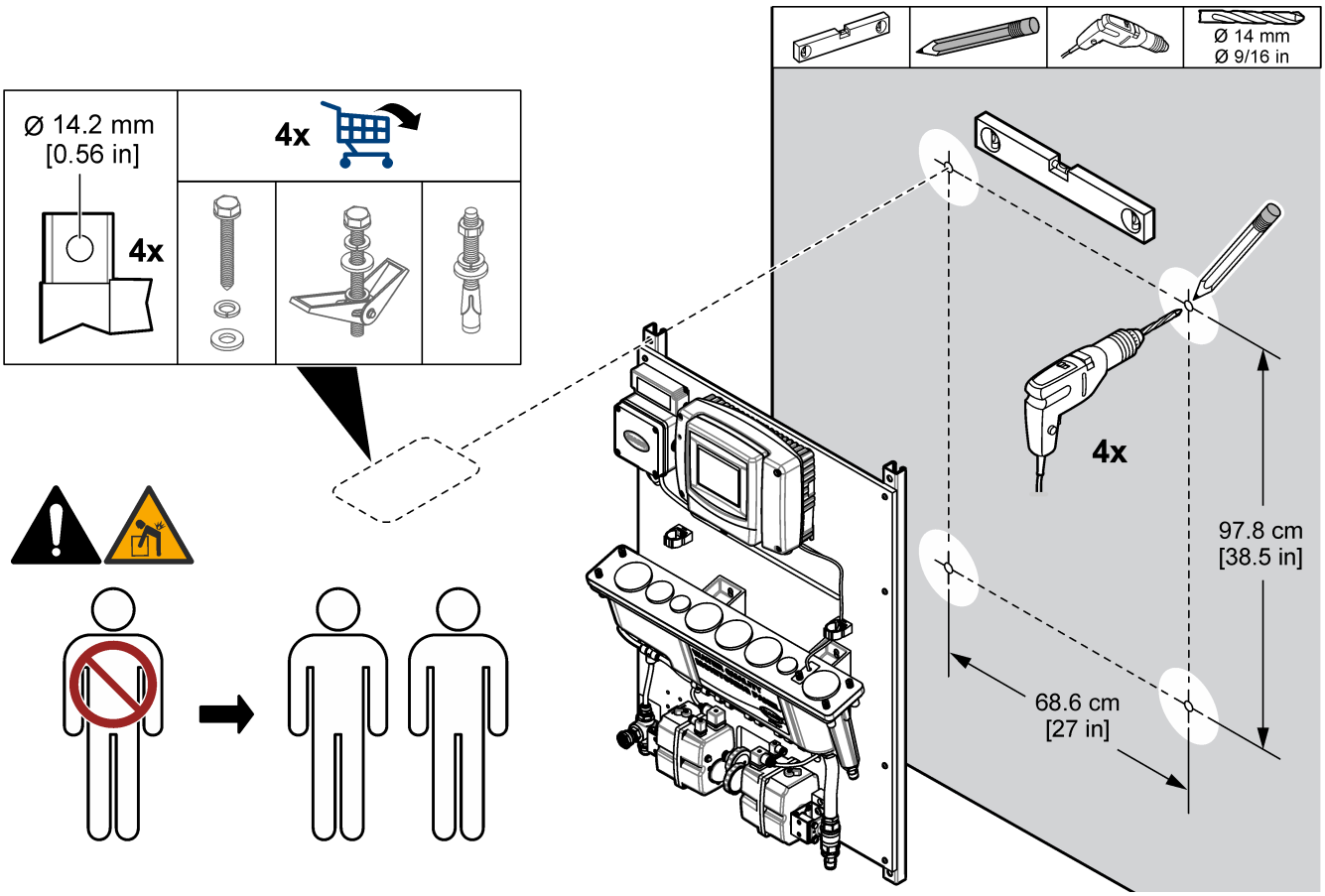

**Figure 19 115031 dimensions**

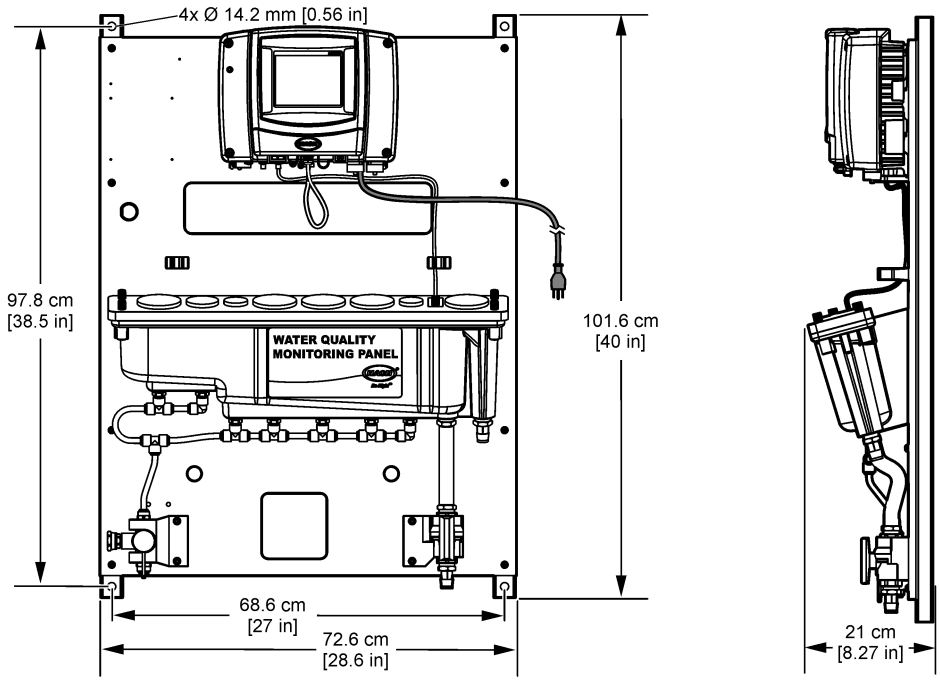


**Figure 20 115031—Hang the panel on a wall**

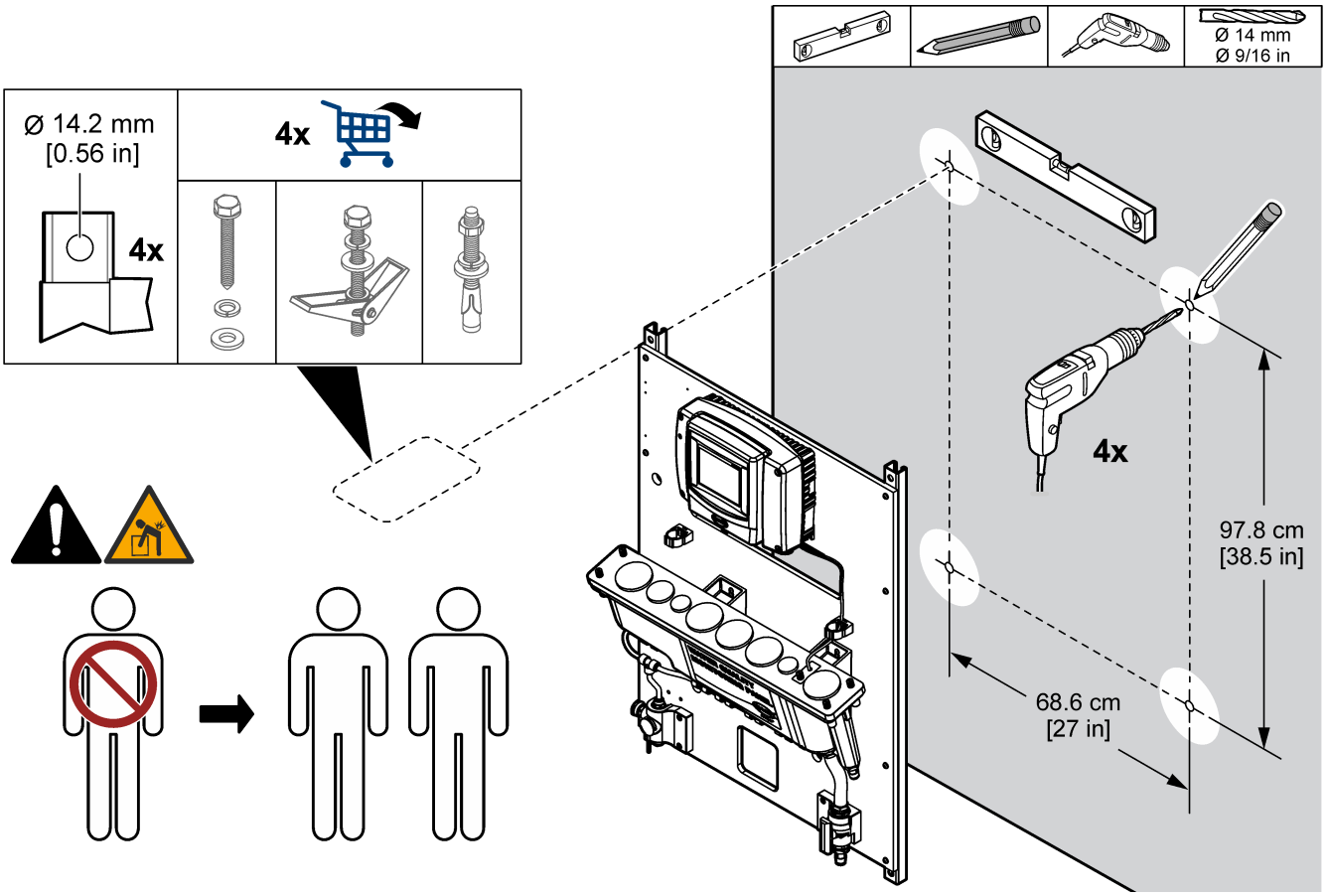

### 3.4.3 Install the sample, flush and drain lines

Install the sample and drain tubing as shown in Figure 21 or Figure 22. Make sure that the drain tubing has a constant downward slope to the external drain. Connect a garden hose to the flush inlet as shown. Supply clean water to the flush inlet.

**Figure 21 8288000, 8288000NC—Sample, flush and drain connections**

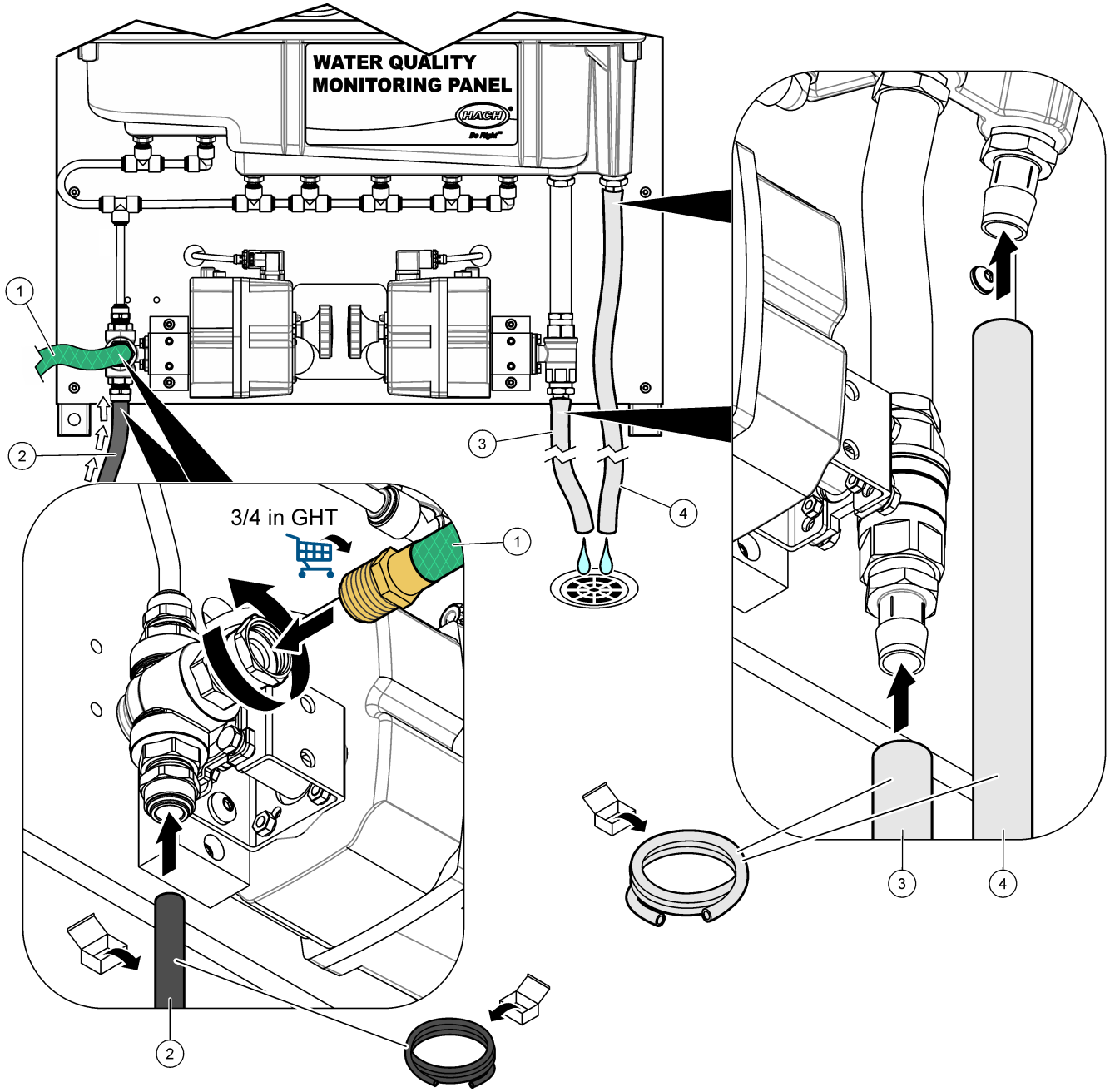


| | |
|---|---|
| **1** Sample tubing | **3** Flush drain tubing |
| **2** Flush line (garden hose, user-supplied) | **4** Drain tubing |

**Figure 22 115031—Sample, flush and drain connections**

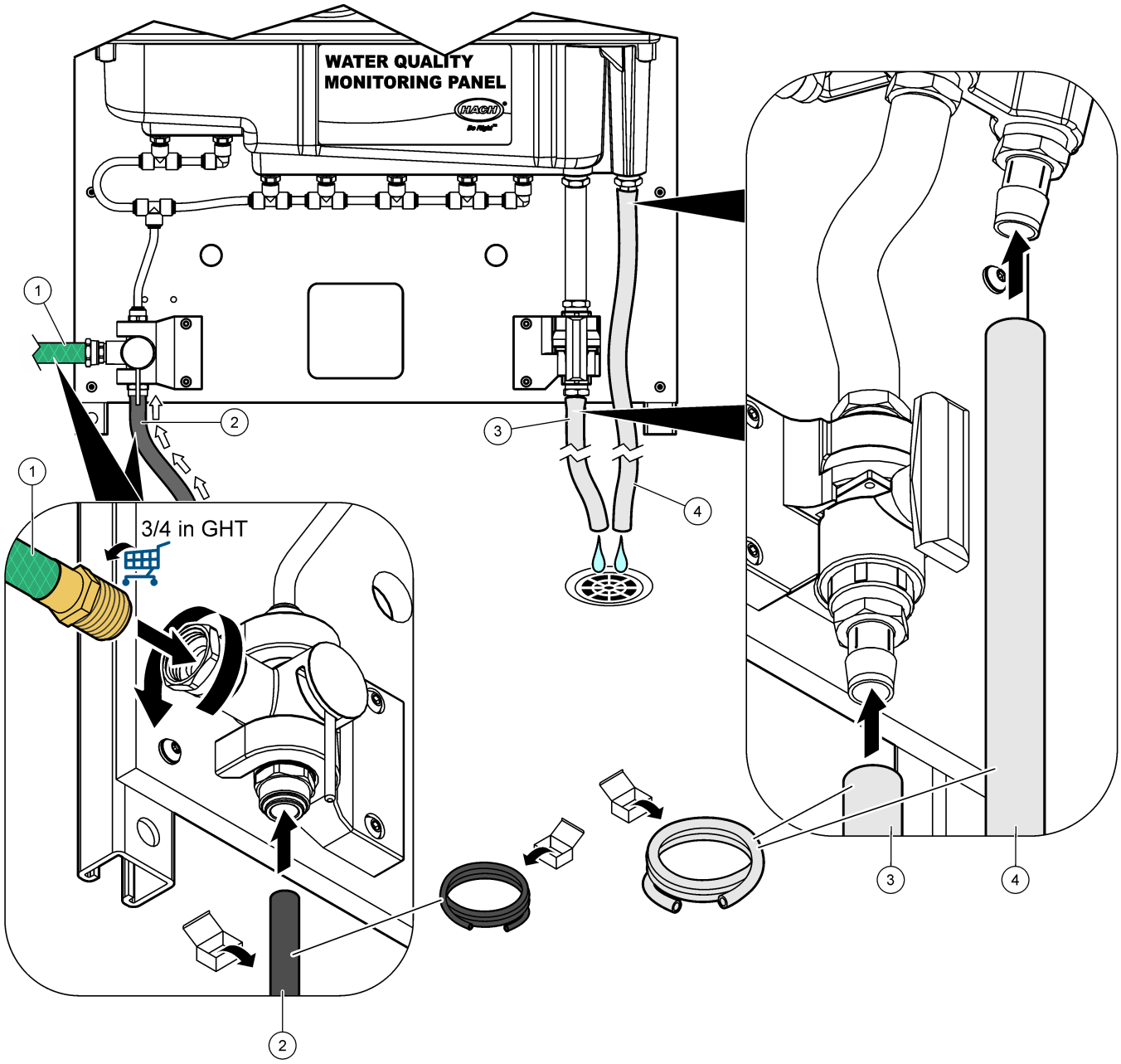


| | |
|---|---|
| **1** Sample tubing | **3** Flush drain tubing |
| **2** Flush line (garden hose, user-supplied) | **4** Drain tubing |

### 3.4.4 Install the sensors

Refer to Table 5 for the sensors that can be installed in the flow channel with the use of the applicable adapters.

**Table 5 WQMP sensor options**

| Port Size | Sensor options | Sensor PN | Adapter PN |
|---|---|---|---|
| Small | pHD | DPD1R1-WDMP | 6859000 |
| | ORP | DRD1R5-WDMP | |
| Medium | Conductivity, Inductive (3700 Series) | D3725E2T-WDMP | 6858800 |
| Large | Conductivity, Inductive, digital 3798-S sc | LXV428.99.00001 | 8829300 |
| | LDO | 9020000 | 8548600 |
| | Nitratax plus sc nitrate sensor | LXV420.99.50002 | 8549400 |
| | FP360sc Oil In Water Sensor | LXV441.99.11302 | |
| | UVAS plus sc UV sensor | LXV418.99.50002 | |
| | AN-ISE sc ammonium and nitrate | LXV440.99.00002 | 6858400 |
| | Solitax T-Line sc Turbidity | LXV423.99.10000 | |
| | Solitax TS-Line sc Turbidity and Suspended Solids | LXV423.99.10100 | |
| | TSS sc Turbidity and Suspended Solids | LXV323.99.10002 | |

1. Refer to the sensor user manuals to complete the necessary sensor preparation tasks (e.g., remove the cap from the pH sensor).
2. Use the applicable adapter to install the sensors in the port holes. Refer to Figure 23.
3. Connect each cable from the sensors (or gateway) to one of the digital SC connectors on the SC1000 Controller. Refer to Figure 24. If the sensor uses a gateway, put the gateway in one of the gateway holders on the panel. Refer to Figure 25 or Figure 26.

**Figure 23 Install the sensors—pH sensor example**

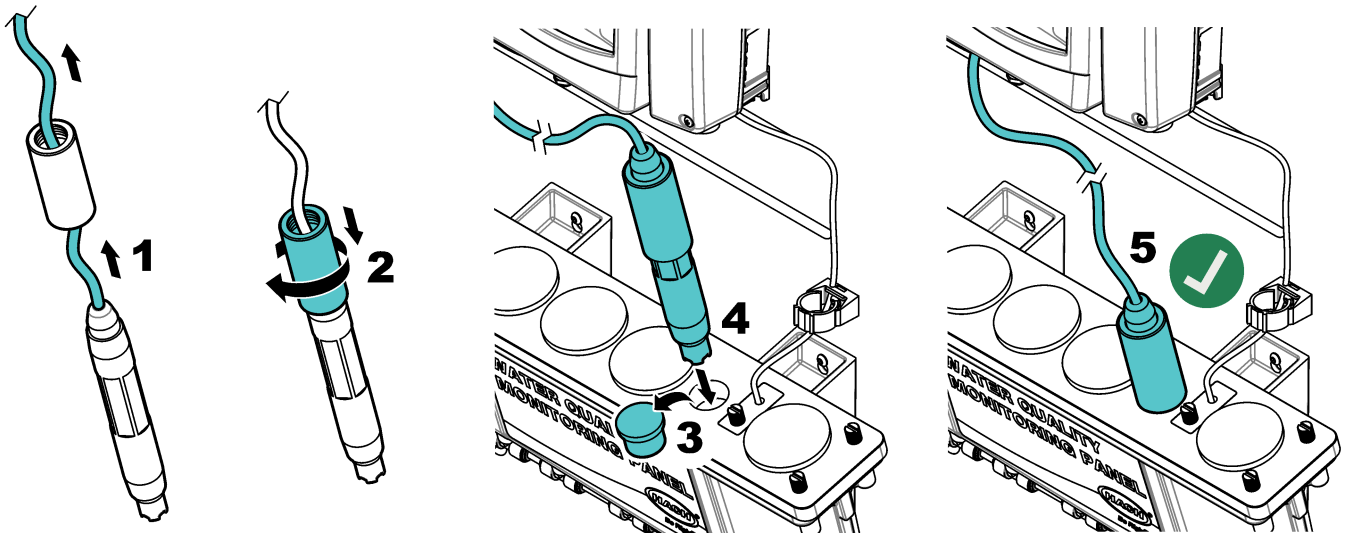

Figure 24 Connect the sensors to the SC1000 Controller

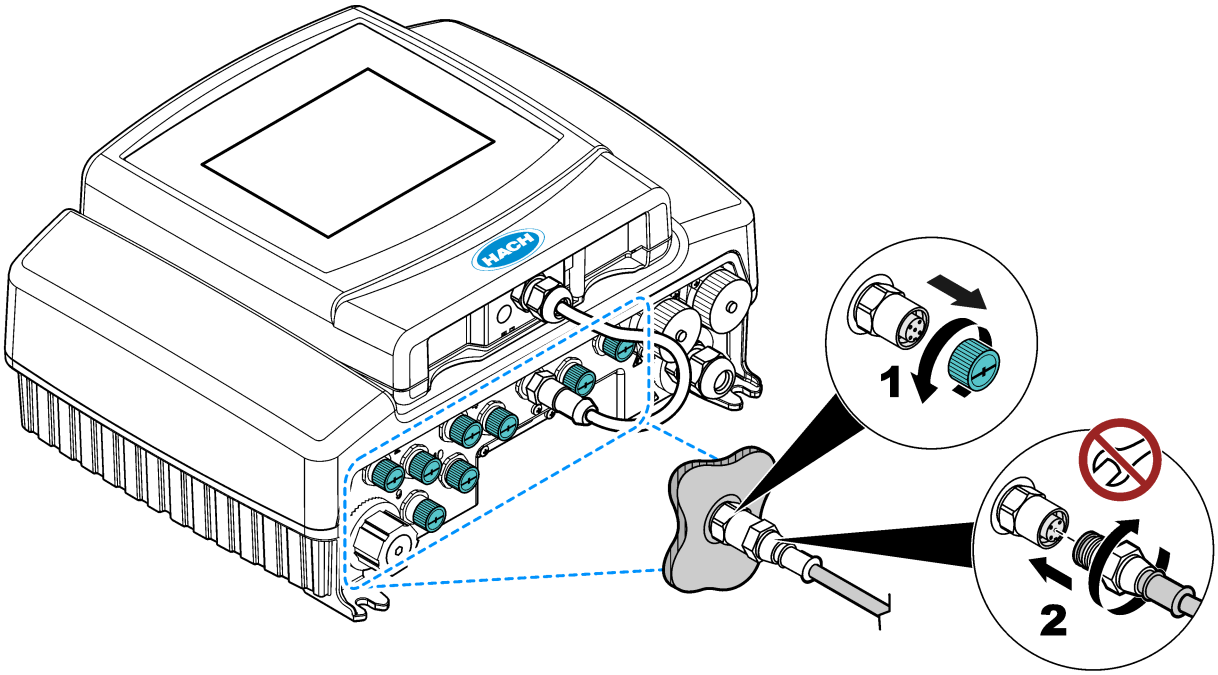


Figure 25 8828000, 8828000NC—Install the gateway

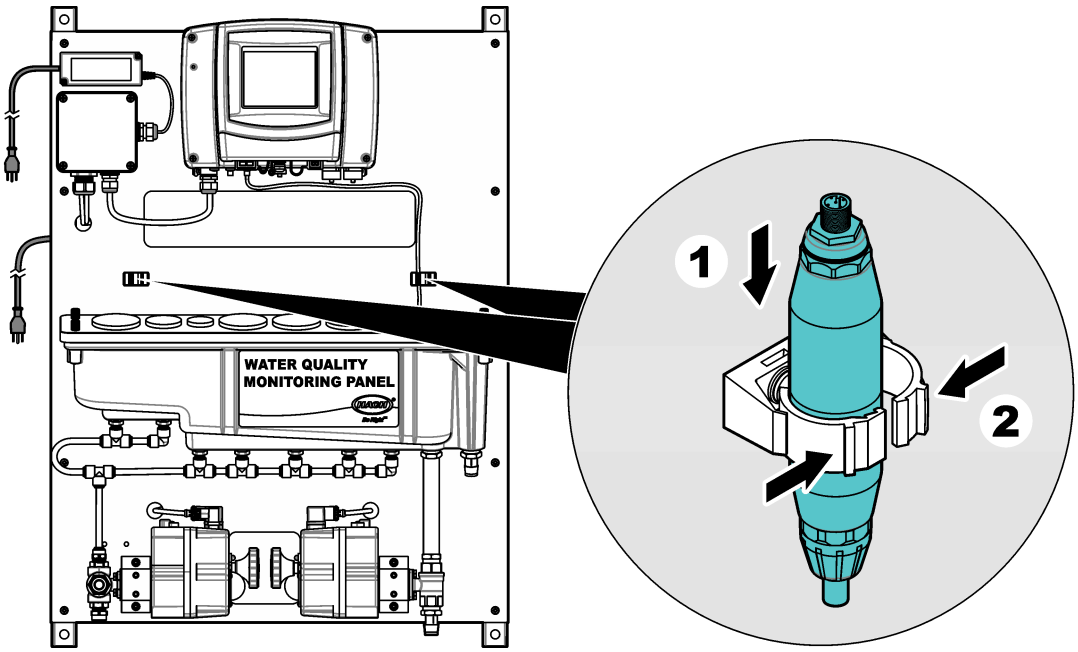

**Figure 26 115031—Install the gateway**

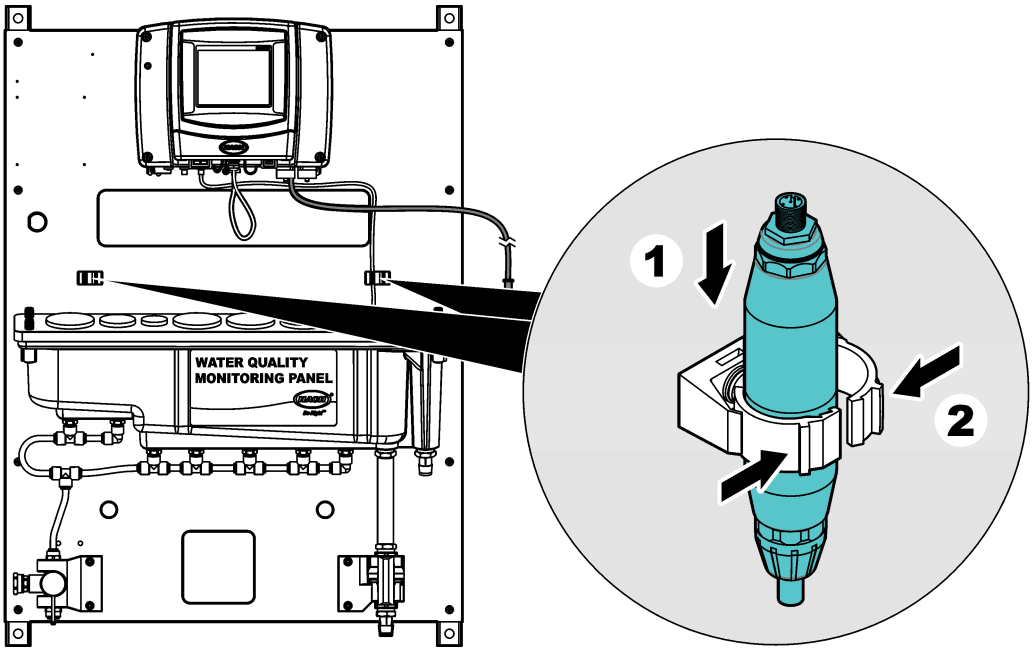


## 3.5 Startup

Make sure that all of the plumbing connections are complete before startup.

1. Open the sample inlet valve to let sample flow through the plumbing system. Make sure that the flow rate and pressure are within the limits. Refer to Specifications on page 29.
2. Open the flow valve on the flush line.
3. Examine the plumbing for fluid leaks. Stop the leaks if found.
4. Connect to power. Refer to Figure 27.
   - 8828000, 8828000NC panels—Connect the controller and power supply to power.
   - 115031 panel—Connect the controller to power.

   The display light comes on. The connected sensors show on the display.
   ***Note:*** *To supply AC power to the controller with conduit, refer to the controller user manual.*
5. If the panel came without a controller (8828000NC), configure the level sensor as follows:
   a. From the main menu, select **SC1000 SETUP** > **CURRENT INPUTS** > **mA INPUT INT** and select **CURRENT INPUT 1**.
   b. Go to **EDIT NAME** and enter LEVEL.
   c. Go to **SET FUNCTION** and select **DIGITAL**.
   d. Go to **LOGIC** and select **REVERSE**.
   e. Move the level sensor up and down in the flow channel. The reading for LEVEL changes if the level sensor is configured correctly.
6. Calibrate the installed sensors. Refer to the supplied user manuals for calibration instructions.
7. Let the panel operate for 4 to 6 hours until the measurements become stable.

   ***Note:*** *The automatic flush valves are set at the factory to automatically start a flush every 8 hours for a duration of 5 minutes. These times can be changed in the SC1000 Controller in the relay settings. Refer to* Change the automatic flush valve settings *on page 44*.

**Figure 27 Connect to power**

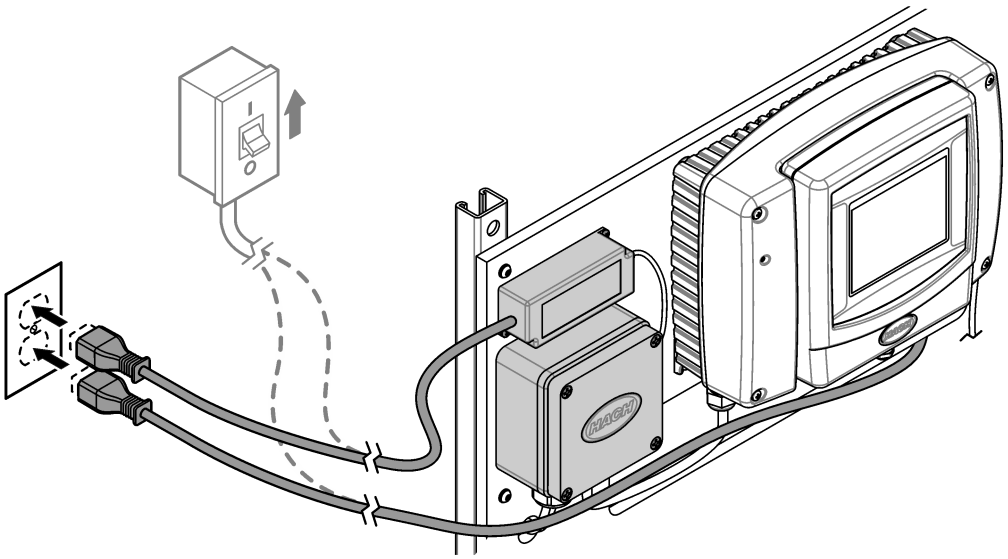

## 3.6 Operation

After the startup procedure is complete and the measurements are stable, monitor the measurements regularly. Measure grab samples and calibrate the analyzers and sensors regularly to make sure that the measurements are accurate. Refer to the user manual of each device for calibration instructions.

### 3.6.1 Change the automatic flush valve settings

8828000 and 8828000NC panels have one three-way automatic valve for the sample inlet and one two-way automatic valve for the drain to flush the flow channel. The valves are connected to the controller Relay 1 to automatically flush the build-up of material from the bottom of the flow channel. Relay 1 is set at the factory to flush the flow channel every 8 hours for a duration of 5 minutes. To change the time interval or flush duration, change the relay settings for the SC1000 Controller as follows:

1. From the SC1000 Controller main menu, go to **SC1000 SETUP** > **RELAY** > **RELAY INT** > **RELAY 1**.
2. Make sure that **SET FUNCTION** shows **TIMER**.
3. Select **SENSOR** > **SELECT SENSOR**. Select one of the sensors, for example pHD.
   ***Note:*** *The selected sensor is not important.*
4. Change the flush interval and duration:

| Option | Description |
|---|---|
| **OFF DURATION** | Sets the time (in seconds) when the relay is not active, for example 28,800 seconds (8 hours). The relay will become active after the specified time. |
| **DURATION** | Sets the time (in seconds) that the relay stays active (flush duration), for example 300 seconds (5 minutes). |

## 3.7 Replacement parts and accessories

***Note:*** *Product and Article numbers may vary for some selling regions. Contact the appropriate distributor or refer to the company website for contact information.*

| Description | Item no. |
|---|---|
| Automatic 3-way ball valve assembly, ½-inch NPT, 24 V | 8830700 |
| Automatic 2-way ball valve assembly, ¾-inch NPT, 24 V | 8830800 |
| Manual 3-way ball valve assembly, ½-inch NPT, 24 V | 8830400 |
| Manual 2-way ball valve assembly, ¾-inch NPT, 24 V | 4507300 |
| Tubing, drain, ¾-inch ID × 1-inch OD | 5994800 |
| Tubing, sample, 0.375-inch ID × 0.500-inch OD | 5115900 |

# Section 4 SPMP-CL and SPMP-ULRCL

## 4.1 Product overview

The Single Parameter Monitoring Panel for chlorine (SPMP-CL or SPMP-ULRCL) is a chlorine analyzer that is plumbed and installed on a panel. Refer to Figure 28. The controller on the panel sends the data to a communications network for remote monitoring.

**Figure 28 SPMP-CL/SPMP-ULRCL overview**

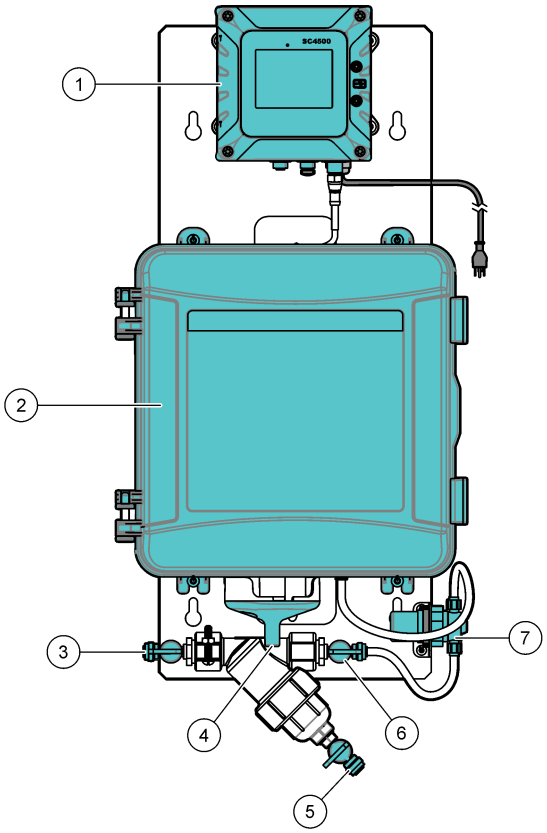


| | |
|---|---|
| **1** SC4500 Controller | **5** Filter drain |
| **2** CL17sc (or Ultra Low Range CL17sc) chlorine analyzer | **6** Isolation valve |
| **3** Sample inlet, ¼-inch OD tubing | **7** Pressure regulator |
| **4** Sample drain, ½-inch ID tubing | |

## 4.2 Specifications

Specifications are subject to change without notice. The specifications that follow are for the SPMP-CL and SPMP-ULRCL panels. Refer to the supplied user manuals for the controller and analyzer specifications.

| Specification | Details |
|---|---|
| Dimensions (W x H x D) | 33 x 71.1 x 21.8 cm (13 x 28 x 8.6 inch) |
| Weight | 9 kg (20 lb) |
| Power requirements | 100–240 VAC ±10%, 50/60 Hz; maximum 1 A |
| Sample flow rate | 60 to 200 mL/min |
| Sample pressure | 31 to 517 kPa (4.5 to 75 psi) |

| Specification | Details |
|---|---|
| Sample inlet connection | ¼-inch OD tube |
| Sample waste drain connection | ½-inch ID tube |
| Certifications | SC4500 Controller is CE compliant and is TÜV listed to UL and CSA safety standards |

## 4.3 Product components

Make sure that all components have been received. Refer to Figure 29. If any items are missing or damaged, contact the manufacturer or a sales representative immediately.

**Figure 29 Product components**

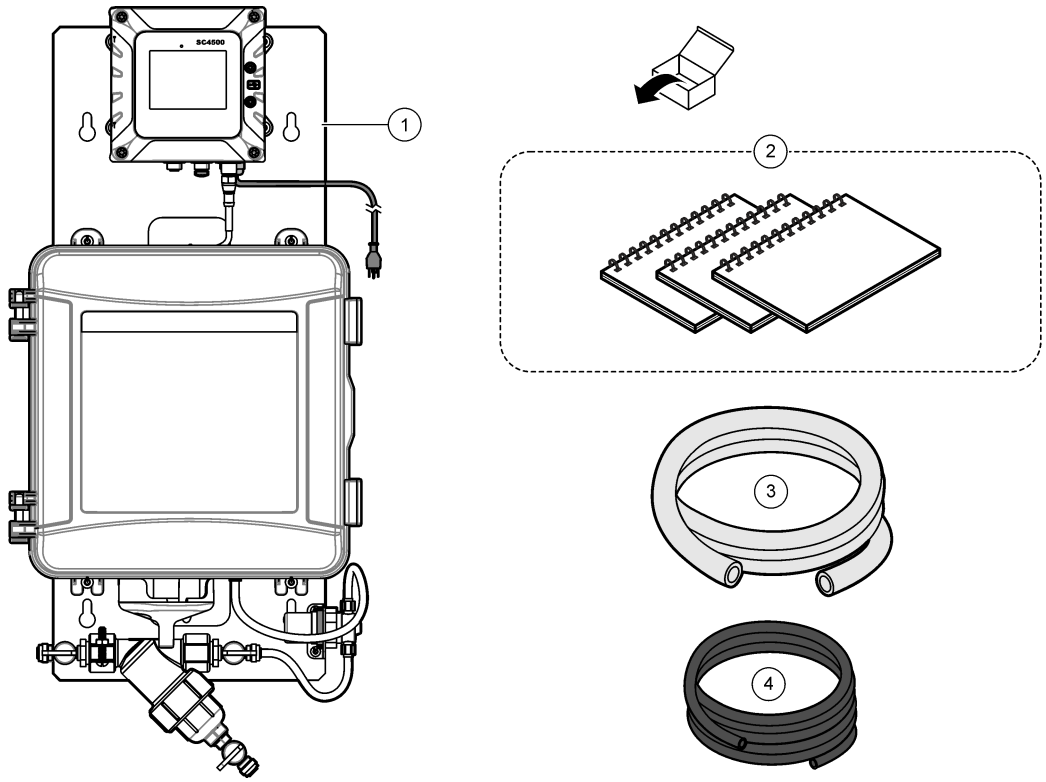


| | |
|---|---|
| **1** SPMP-CL or SPMP-ULRCL | **3** Tubing, drain, ½-inch ID × $^{11}/_{16}$-inch OD, 3 m (10 ft) |
| **2** Controller and analyzer user manuals | **4** Tubing, 0.170-inch ID × 0.250-inch OD, 6.1 m (20 ft) |

## 4.4 Installation

**⚠WARNING**

Multiple hazards. Only qualified personnel must conduct the tasks described in this section of the document.

### 4.4.1 Mounting

**⚠WARNING**

Personal injury hazard. Make sure that the wall mounting is able to hold 4 times the weight of the equipment.

**⚠WARNING**

Personal injury hazard. Instruments or components are heavy. Use assistance to install or move.

Attach the panel on a flat, vertical wall surface in an indoor location away from direct sunlight. Install the instrument in a location and position where the user can easily disconnect the instrument from the power source.

Refer to Figure 30 for product dimensions. Refer to Figure 31 to attach the panel to a wall. Mounting hardware is supplied by the user.

**Figure 30 Product dimensions**

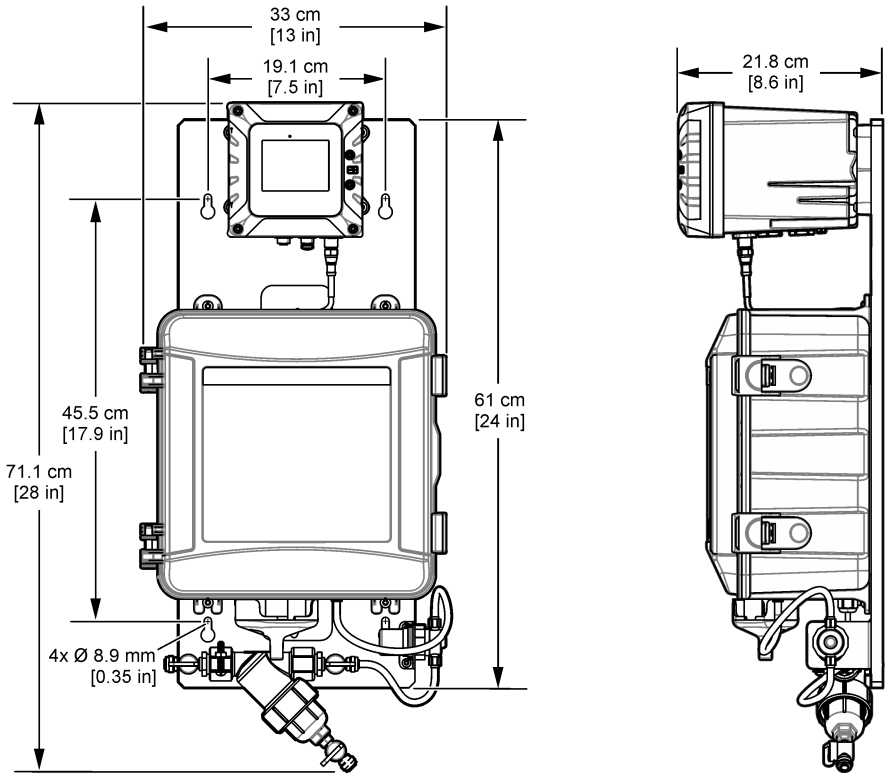

**Figure 31 Hang the panel on a wall**

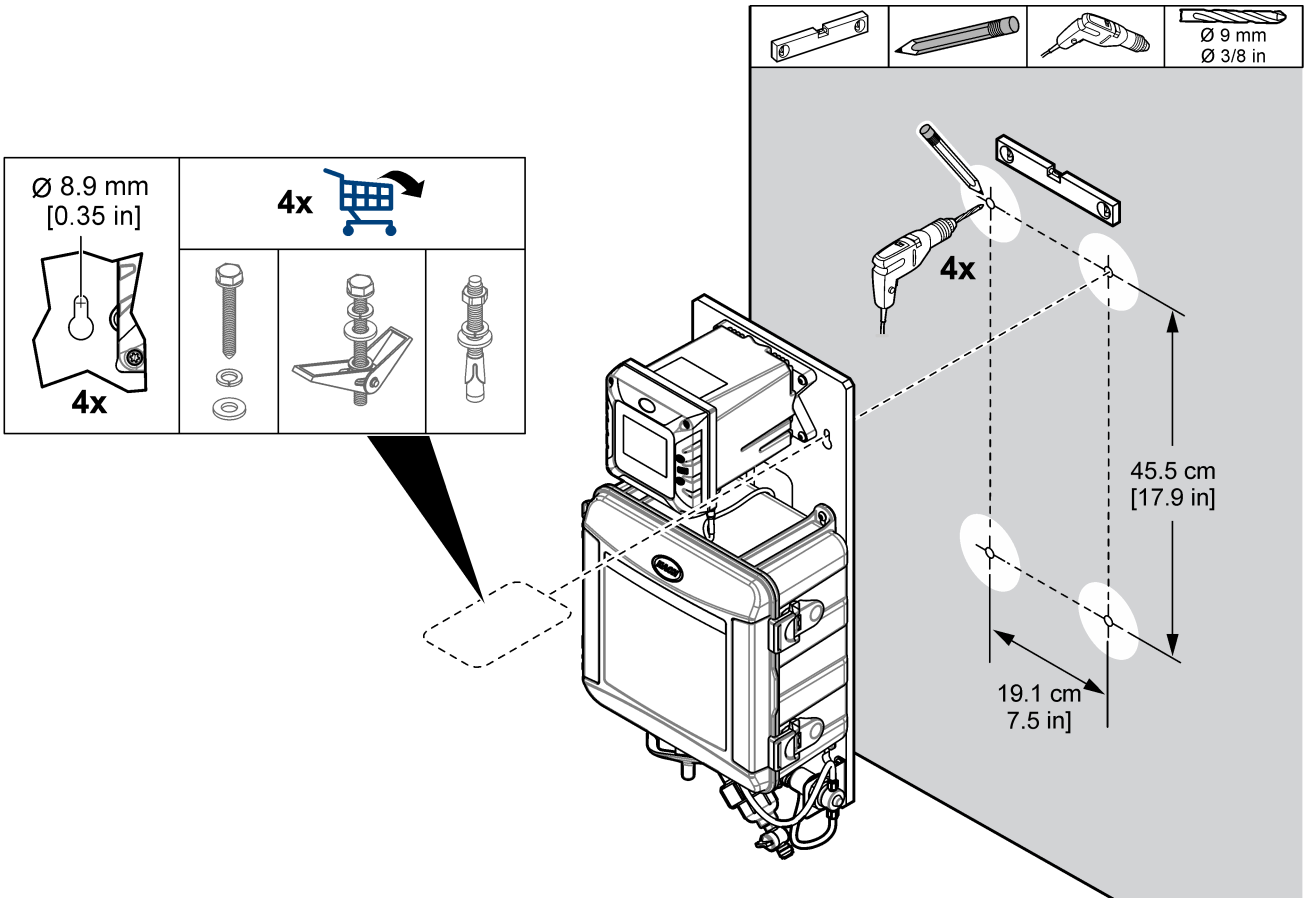

### 4.4.2 Install the sample and drain lines

Install the sample and drain tubing as shown in Figure 32. Make sure that the drain tubing has a constant downward slope to the external drain.

**Figure 32 Sample and drain connections**

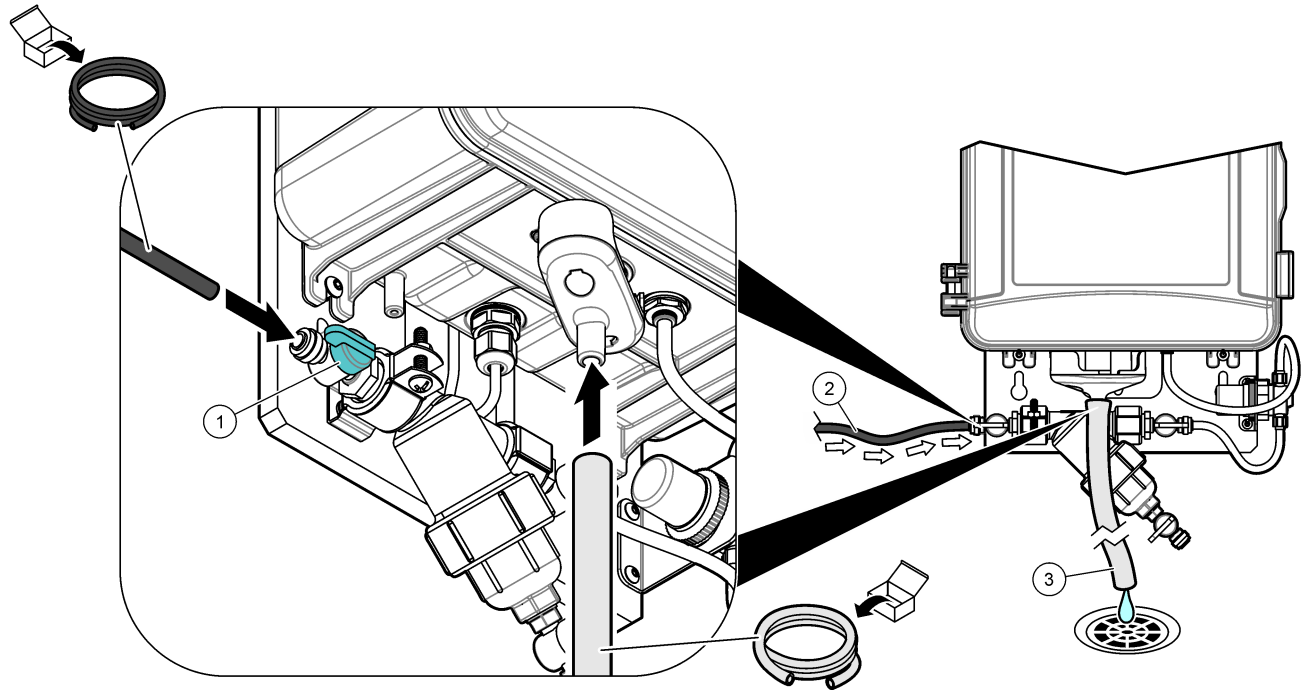


| | | |
|---|---|---|
| **1** Inlet ball valve | **2** Sample tubing | **3** Drain tubing |

## 4.5 Startup

Make sure that all of the plumbing connections are complete before startup.

1. Install the reagents and stir bar in the analyzer. Refer to the CL17sc (or Ultra Low Range CL17sc) chlorine analyzer user manual.
2. Open the sample inlet valve to let sample flow through the plumbing system. Make sure that the flow rate and pressure are within the limits. Refer to Specifications on page 47.
3. Examine the plumbing for fluid leaks. Stop the leaks if found.
4. Apply power to the controller. Refer to Figure 33. The display light comes on. The analyzer shows on the display.

   ***Note:*** *To supply AC power to the controller with conduit, refer to the controller user manual.*
5. Start the prime operation for the chlorine analyzer reagents. Refer to the CL17sc (or Ultra Low Range CL17sc) chlorine analyzer user manual for instructions.
6. Let the panel operate for 4 to 6 hours until the measurements become stable.

**Figure 33 Apply power**

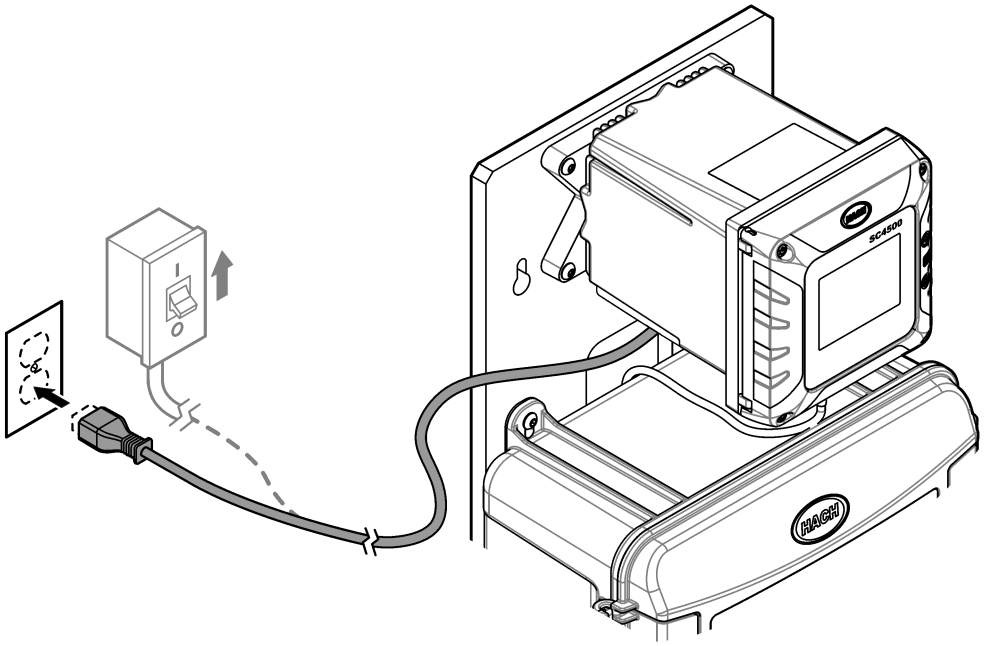


## 4.6 Operation

After the startup procedure is complete and the measurements are stable, monitor the measurements regularly. Measure grab samples to make sure that the measurements are accurate.

## 4.7 Replacement parts and accessories

***Note:*** *Product and Article numbers may vary for some selling regions. Contact the appropriate distributor or refer to the company website for contact information.*

| Description | Item no. |
|---|---|
| Tubing, drain, ½-inch ID × $^{11}/_{16}$-inch OD | 5410800A |
| Tubing, 0.170-inch ID × 0.250-inch OD | 3061600A |

# Section 5 SPMP-PHD

## 5.1 Product overview

The Single Parameter Monitoring Panel for pH (109972, 109973) is a pH sensor that is plumbed and installed on a panel. Refer to Figure 34. The controller on the panel sends the data to a communications network for remote monitoring.

**Figure 34 SPMP-PHD overview**

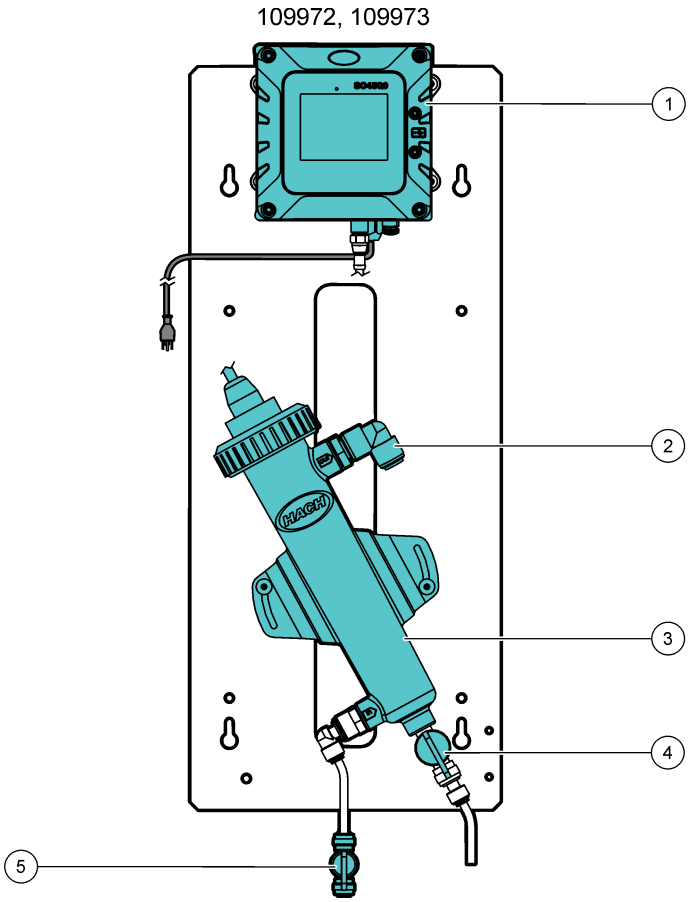


| | |
|---|---|
| **1** SC4500 Controller | **4** Maintenance drain valve |
| **2** Drain tubing connector | **5** Inlet ball valve |
| **3** Flow cell with pH sensor | |

## 5.2 Specifications

Specifications are subject to change without notice. The specifications that follow are for the SPMP-PHD panel. Refer to the supplied user manuals for the controller and sensor specifications.

| Specification | Details |
|---|---|
| Dimensions (W x H x D) | 25.4 x 62.8 x 21.9 cm (10 x 24.7 x 8.6 inch) |
| Weight | 4.6 kg (10.2 lb) |
| Power requirements | 100–240 VAC ±10%, 50/60 Hz; maximum 1 A |
| Sample flow rate | 500–833 mL/min |
| Sample pressure | 345 kPa (50 psi) maximum |
| Sample inlet connection | ¼-inch OD tube |

| Specification | Details |
|---|---|
| Sample waste drain connection | ½-inch OD tube |
| Certifications | SC4500 Controller is CE compliant and is TÜV listed to UL and CSA safety standards |

## 5.3 Product components

Make sure that all components have been received. Refer to Figure 35. If any items are missing or damaged, contact the manufacturer or a sales representative immediately.

**Figure 35 Product components**

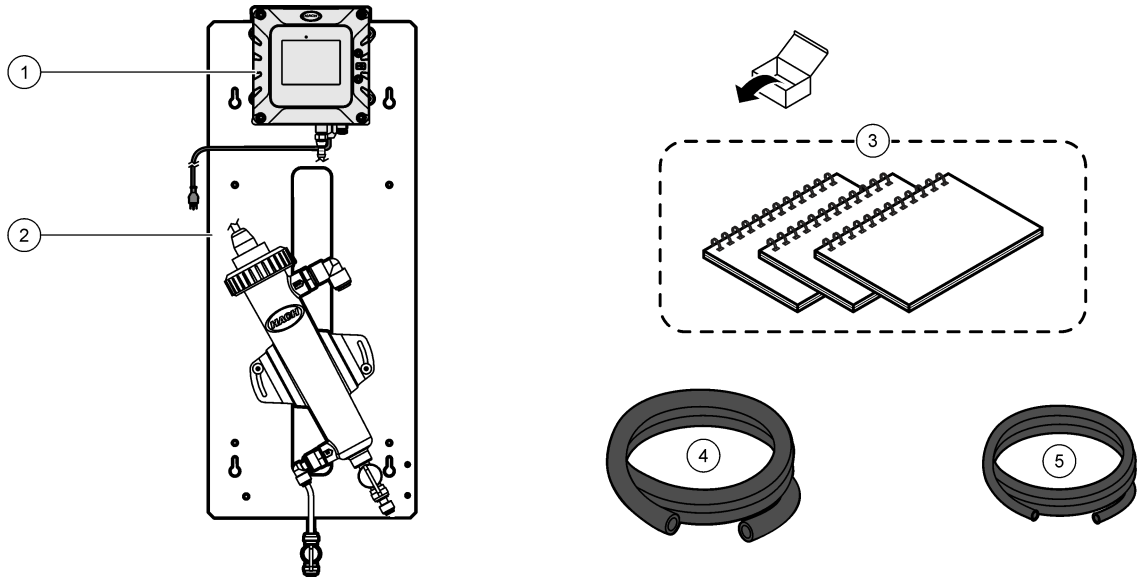


| | |
|---|---|
| **1** SC4500 Controller (not included with 109973) | **4** Tubing, drain, 0.375-inch ID × 0.500-inch OD, 1.8 m (6 ft) |
| **2** SPMP-PHD (109972, 109973) | **5** Tubing, 0.170-inch ID × 0.250-inch OD, 6.1 m (20 ft) |
| **3** User manuals | |

## 5.4 Installation

**⚠WARNING**

Multiple hazards. Only qualified personnel must conduct the tasks described in this section of the document.

### 5.4.1 Attach the controller to the panel (if applicable)

The user must install an SC4500 Controller on the SPMP-PHD panel that ships without a controller (109973). The SC Controller has four mounting holes that align with four mounting bolts on the panel. Refer to Figure 36 to attach the controller to the panel.

**Figure 36 Attach the SC Controller to the panel**

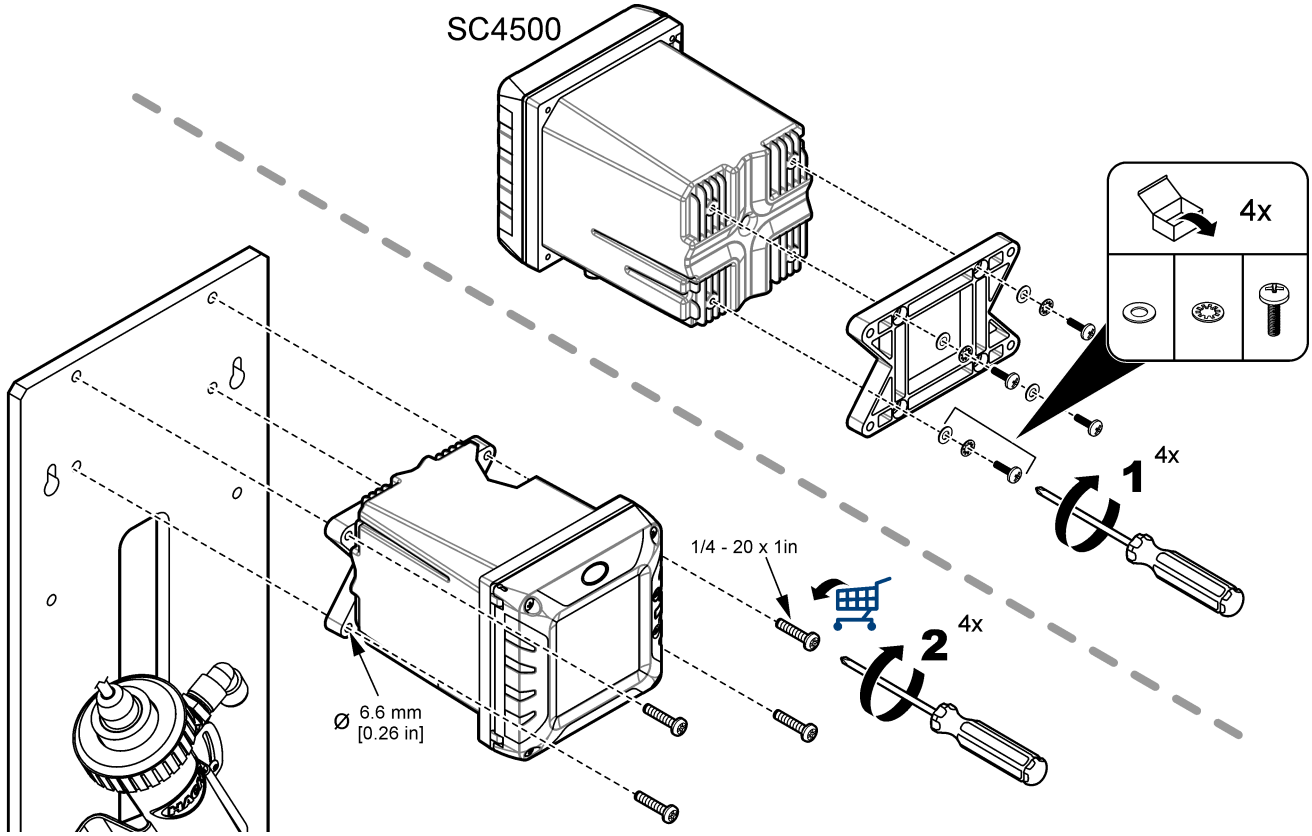


### 5.4.2 Mounting

**⚠WARNING**

Personal injury hazard. Make sure that the wall mounting is able to hold 4 times the weight of the equipment.

**⚠WARNING**

Personal injury hazard. Instruments or components are heavy. Use assistance to install or move.

Attach the panel on a flat, vertical wall surface in an indoor location away from direct sunlight. Install the instrument in a location and position where the user can easily disconnect the instrument from the power source. Refer to Figure 37 for product dimensions. Refer to Figure 38 to attach the panel to a wall. Mounting hardware is supplied by the user.

**Figure 37 Product dimensions**

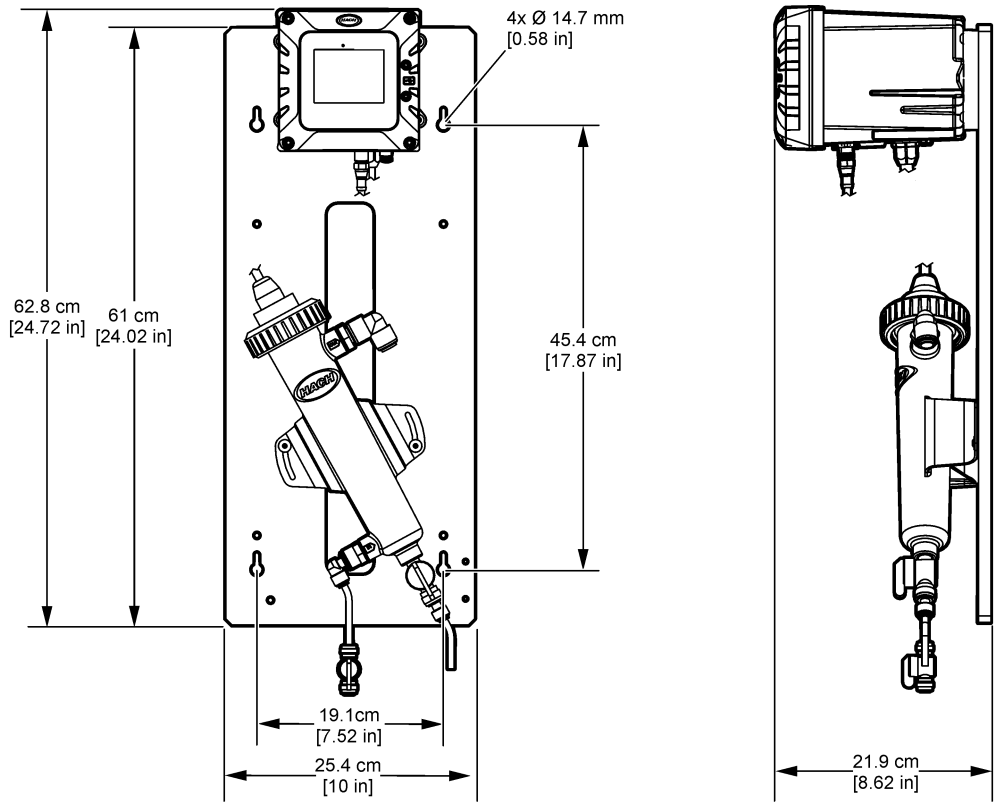


**Figure 38 Hang the panel on a wall**

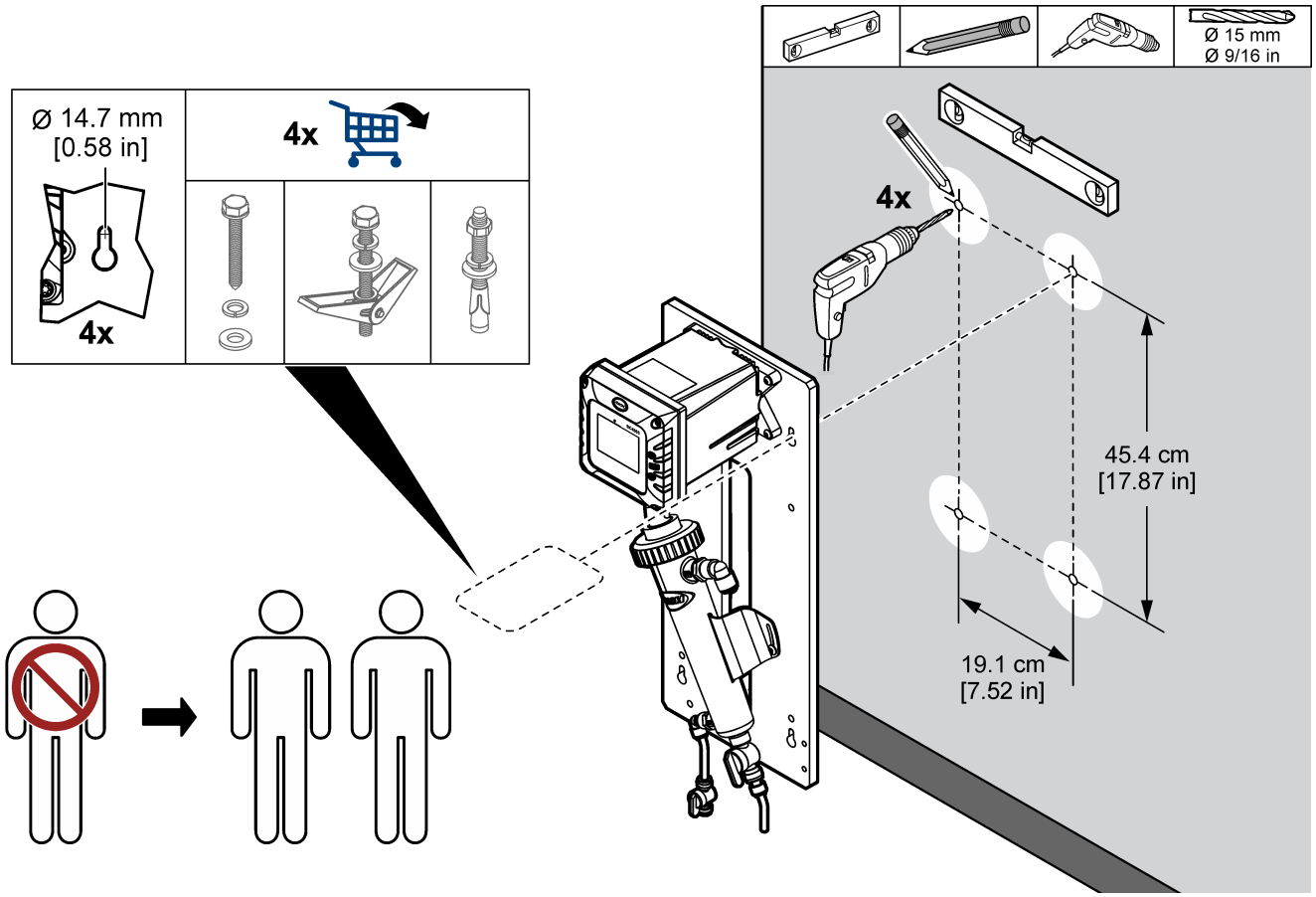

### 5.4.3 Install the sample and drain lines

Install the sample and drain tubing as shown in Figure 39. Make sure that the drain tubing has a constant downward slope to the external drain.

**Figure 39 Sample and drain connections**

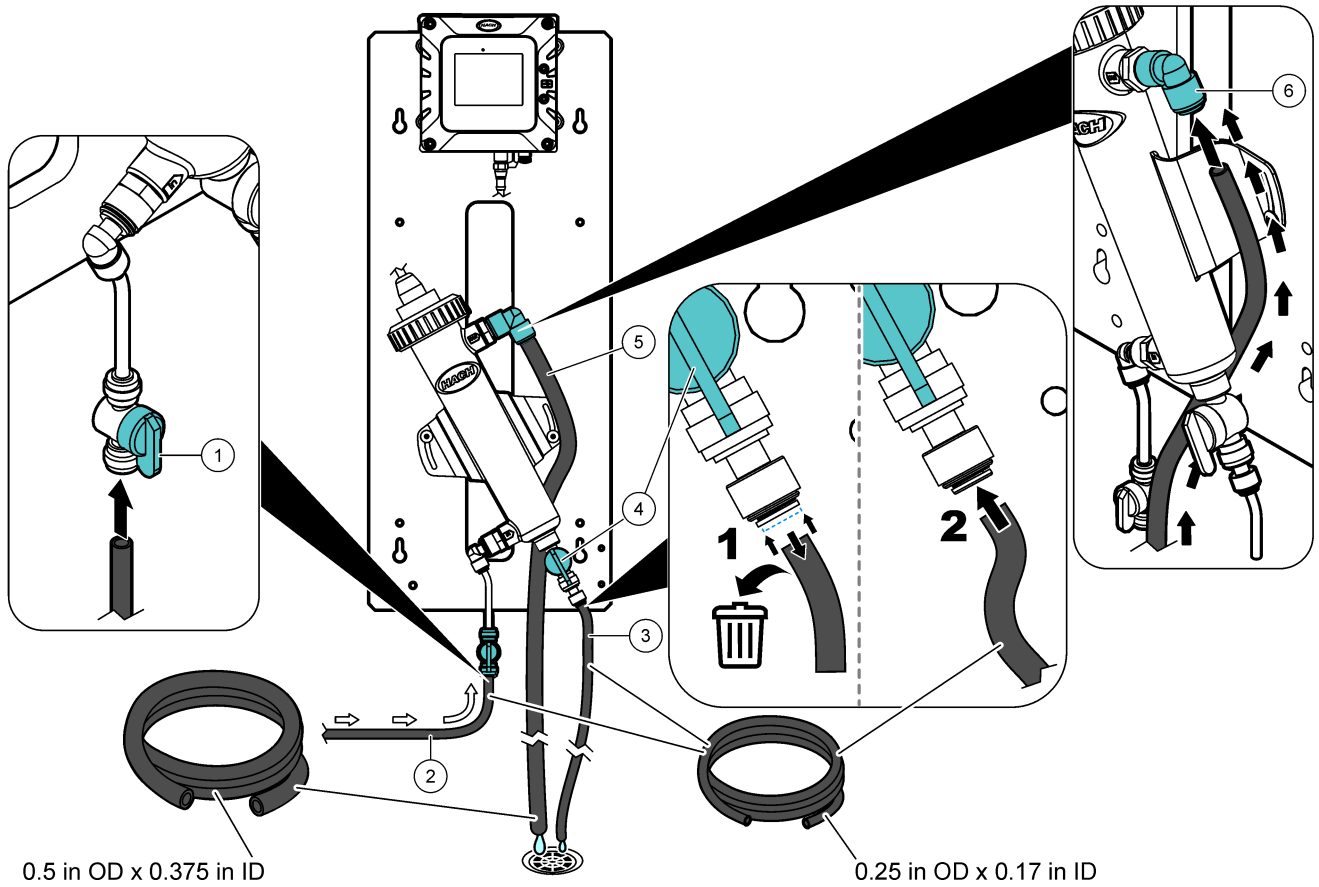


| | | |
|---|---|---|
| **1** Inlet ball valve | **3** Maintenance drain tubing | **5** Drain tubing |
| **2** Sample tubing | **4** Maintenance drain valve | **6** Drain tubing connector |

### 5.4.4 Remove the cap from the pH sensor

Remove the protective cap from the pH sensor before startup. Refer to Figure 40.

***Note:*** *During cold weather, the manufacturer may send the pH sensor in a different package.*

**Figure 40 Remove the cap from the pH sensor**

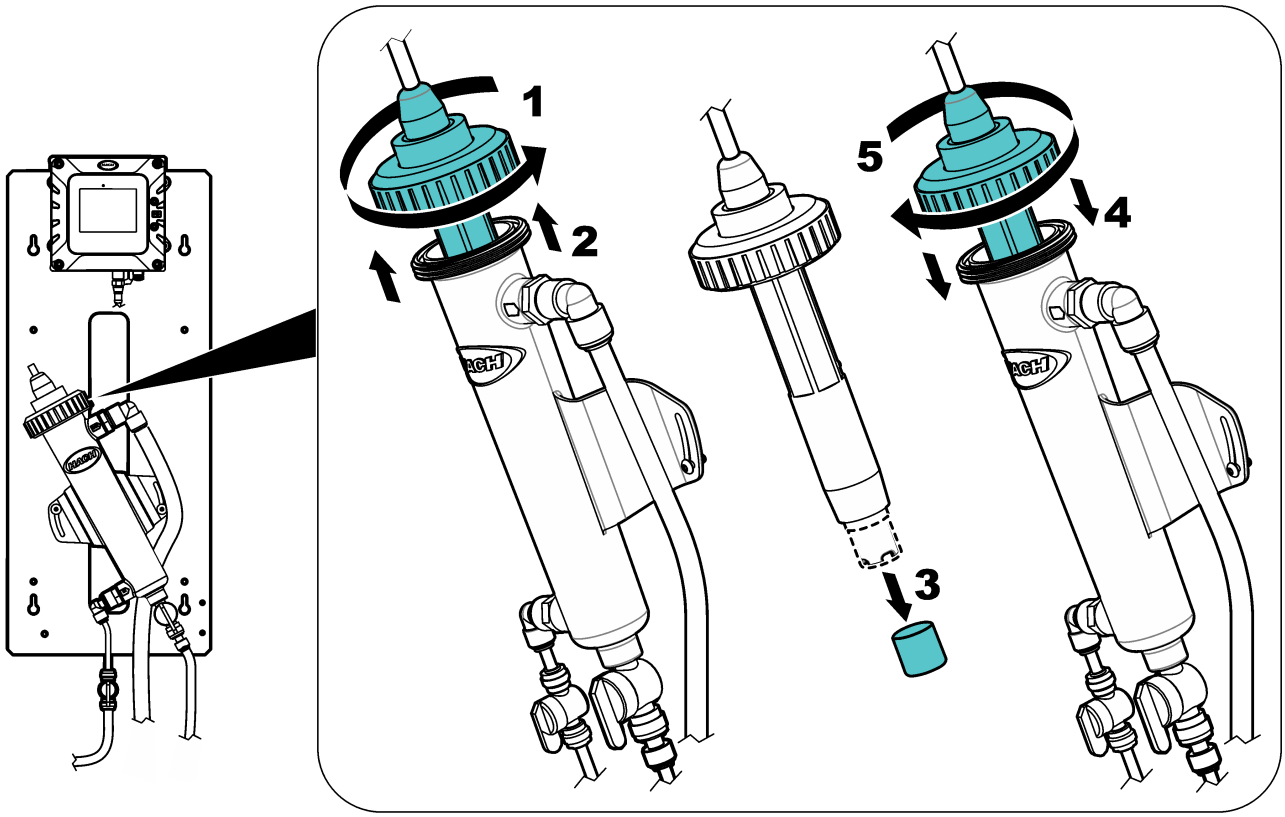


## 5.5 Startup

Make sure that all of the plumbing connections are complete before startup.

1. Open the sample inlet valve to let sample flow through the plumbing system. Make sure that the flow rate and pressure are within the limits. Refer to Specifications on page 53.
2. Examine the plumbing for fluid leaks. Stop the leaks if found.
3. Apply power to the controller. Refer to Figure 41. The display light comes on. The connected sensor shows on the display.

   ***Note:*** *To supply AC power to the controller with conduit, refer to the controller user manual.*
4. Let the panel operate for 4 to 6 hours until the measurements become stable.

**Figure 41 Apply power**

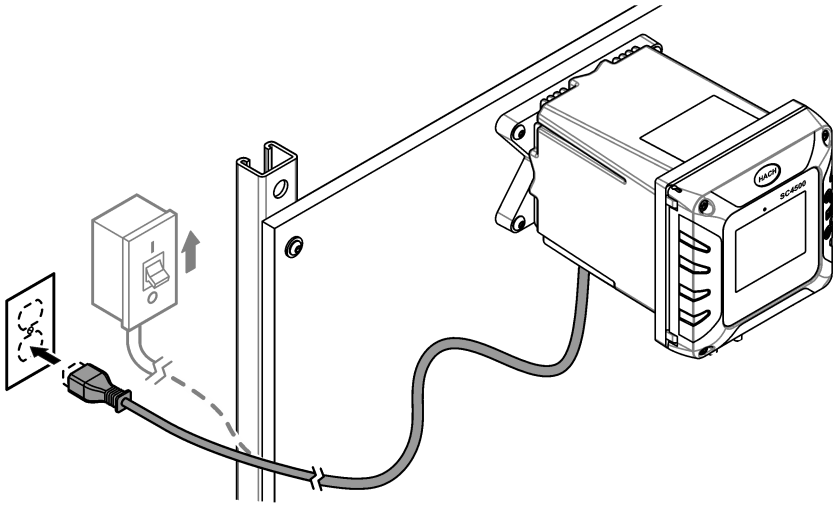

## 5.6 Operation

After the startup procedure is complete and the measurements are stable, monitor the measurements regularly. Measure grab samples to make sure that the measurements are accurate.

## 5.7 Replacement parts and accessories

***Note:*** *Product and Article numbers may vary for some selling regions. Contact the appropriate distributor or refer to the company website for contact information.*

| Description | Item no. |
|---|---|
| Tubing, 0.170-inch ID × 0.250-inch OD | 3061600A |
| Tubing, drain, 0.375-inch ID × 0.500-inch OD | 960380 |

# Section 6 SPMP-TU

## 6.1 Product overview

The Single Parameter Monitoring Panel for turbidity (SPMP-TU, SPMP-TU5400, 109971 or 115030) is a turbidimeter that is plumbed and installed on a panel. Refer to Figure 42. The controller on the panel sends the data to a communications network for remote monitoring.

**Figure 42 Overview**

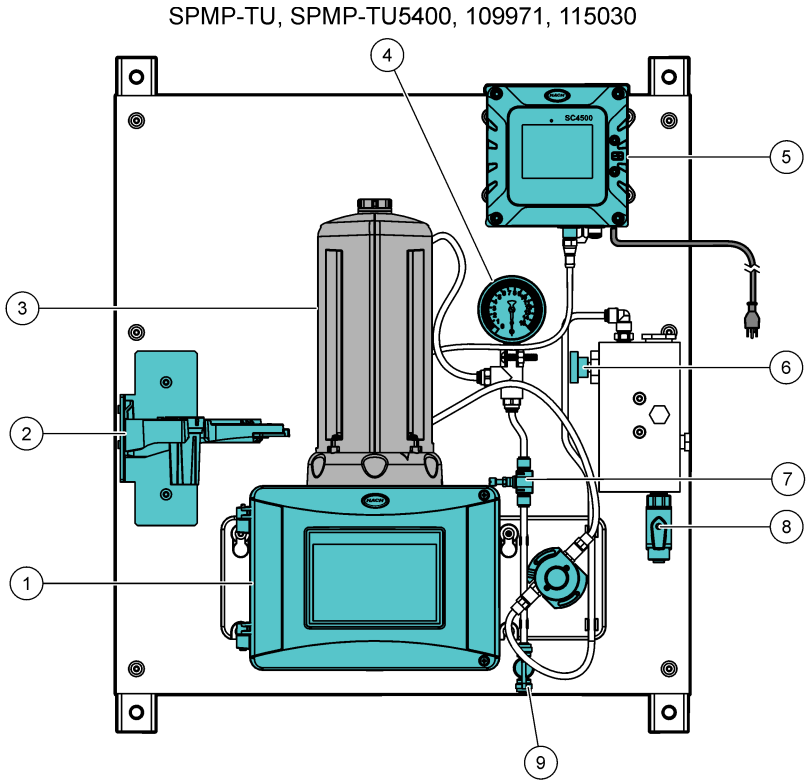


| | |
|---|---|
| **1** TU5300sc or TU5400sc turbidimeter | **6** Inlet needle valve |
| **2** Service bracket | **7** Flow regulator |
| **3** Automatic Cleaning Module (ACM) | **8** Inlet ball valve |
| **4** Pressure gauge, 0 to 15 psi (included with 109971 only) | **9** Drain valve for bubble control |
| **5** SC4500 Controller (not included with 115030) | |

**Table 6 SPMP-TU part numbers**

| Part number | Description |
|---|---|
| SPMP-TU | SPMP-TU with the SC4500 Controller and TU5300sc turbidimeter |
| SPMP-TU5400 | SPMP-TU with the SC4500 Controller and TU5400sc turbidimeter |
| 109971 | SPMP-TU with the SC4500 Controller, pressure gauge and TU5300sc turbidimeter |
| 115030 | SPMP-TU without the SC4500 Controller and TU5300sc turbidimeter |

## 6.2 Specifications

Specifications are subject to change without notice. The specifications that follow are for the SPMP-TU, SPMP-TU5400, 109971 and 115030 panels. Refer to the supplied user manuals for the controller and turbidimeter specifications.

| Specification | Details |
|---|---|
| Dimensions (W x H x D) | 33 x 71.1 x 21.8 cm (13 x 28 x 8.6 inch) |
| Weight | 14.0 kg (30.8 lb) with controller |
| Power requirements | 100–240 VAC ±10%, 50/60 Hz; maximum 1 A |
| Sample flow rate | 100–1000 mL/minute; optimal flow rate: 200–500 mL/min |
| Sample pressure | 517 kPa (75 psi) maximum |
| Sample inlet connection | ¼-inch OD tube |
| Sample waste drain connection | ¼-inch OD tube |
| Certifications | SC4500 Controller is CE compliant and is TÜV listed to UL and CSA safety standards |

## 6.3 Product components

Make sure that all components have been received. Refer to Figure 43. If any items are missing or damaged, contact the manufacturer or a sales representative immediately.

**Figure 43 Product components**

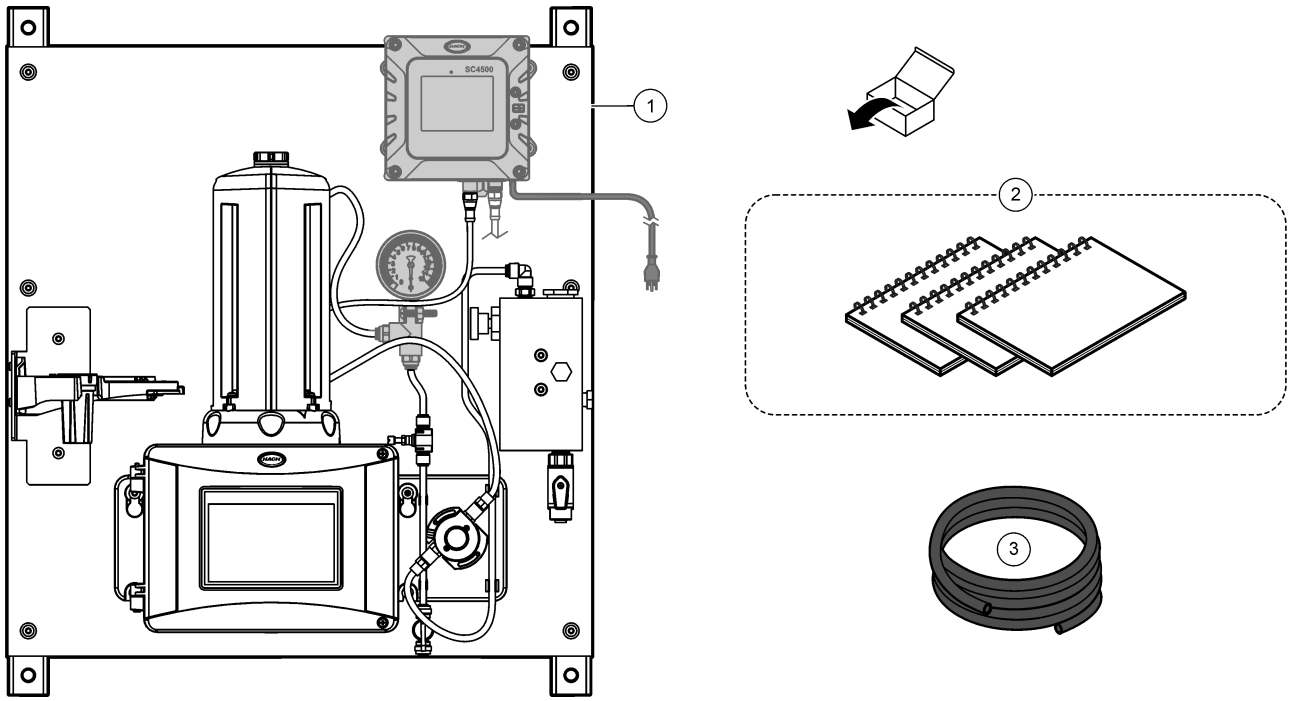


| | |
|---|---|
| **1** SPMP-TU, SPMP-TU5400, 109971 or 115030 | **3** Tubing, 0.170-inch ID × 0.250-inch OD, 3 m (10 ft) |
| **2** Controller and turbidimeter user manuals[1] | |

[1] The controller user manual is not included with the 115030 panel.

## 6.4 Installation

**⚠WARNING**

Multiple hazards. Only qualified personnel must conduct the tasks described in this section of the document.

### 6.4.1 Install the SC4500 Controller (if applicable)

**⚠DANGER**

Electrocution hazard. Always remove power to the instrument before making electrical connections.

The user must install an SC4500 Controller on the SPMP-TU panel that ships without a controller (115030). Mount the controller and make the electrical connections as follows:


- Attach the controller to the panel on page 63
- Connect the instrument cables on page 64


#### 6.4.1.1 Attach the controller to the panel

The SC Controller has four mounting holes that align with four mounting bolts on the panel. Refer to Figure 44 to attach the controller to the panel.

**Figure 44 Attach the SC Controller to the panel**

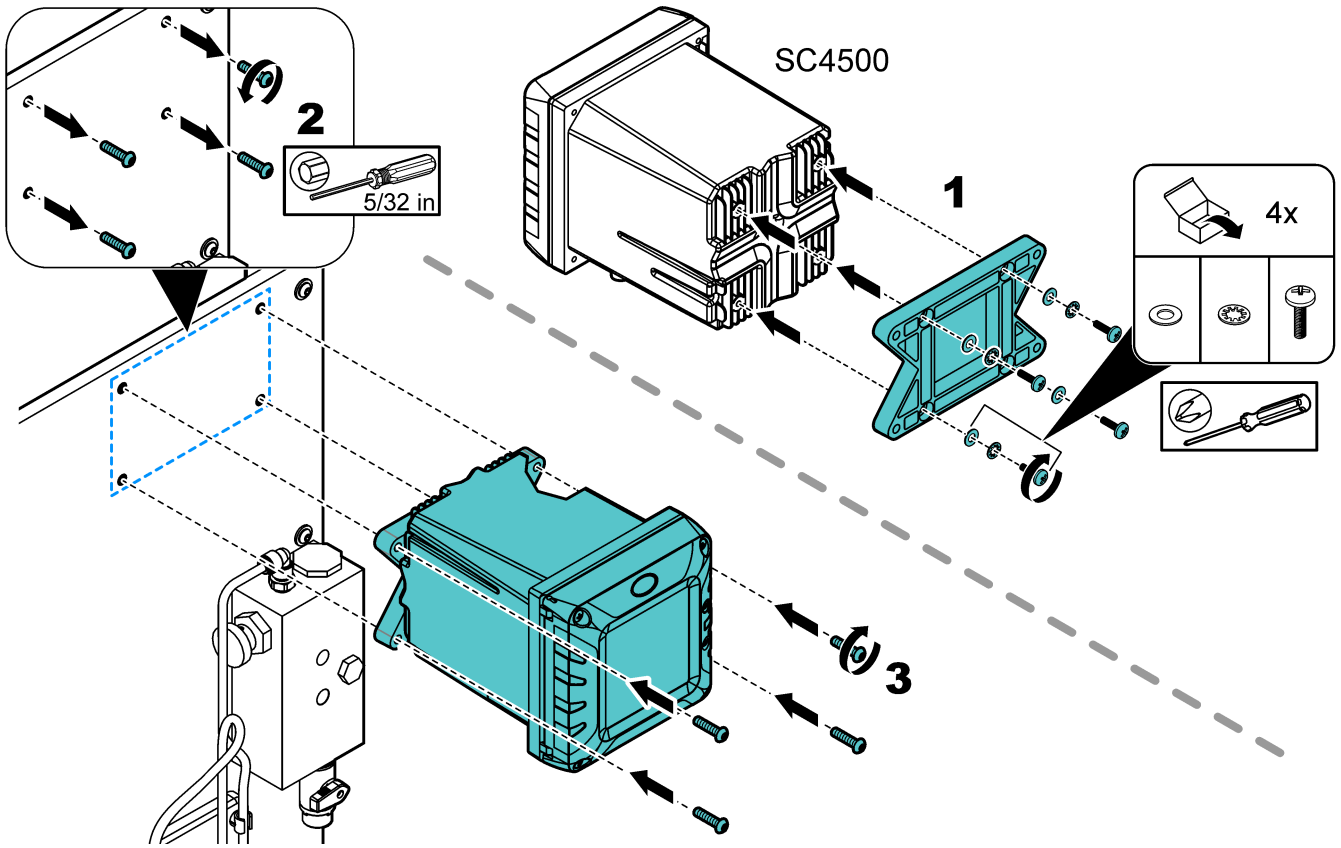

### 6.4.1.2 Connect the instrument cables

Connect the turbidimeter cable to one of the digital SC connectors on the SC4500 Controller. Refer to Figure 45.

**Figure 45 Connect the instrument cables to the controller**

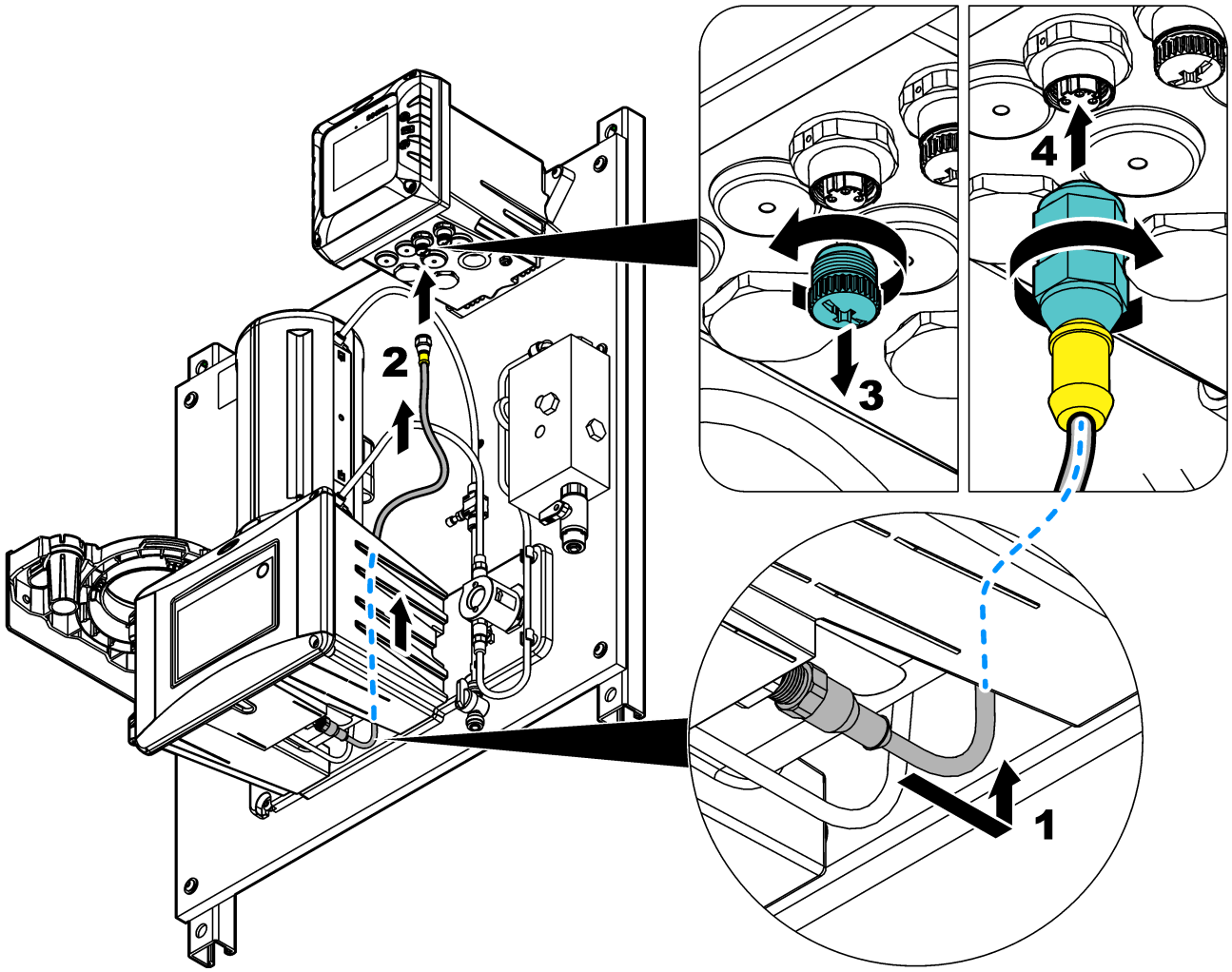

### 6.4.2 Install the ACM on the turbidimeter

If the panel includes the Automatic Cleaning Module (ACM), install the ACM with the panel in a horizontal position before the panel is mounted vertically on a wall. Refer to Figure 46.

**Figure 46 Install the ACM on the turbidimeter**

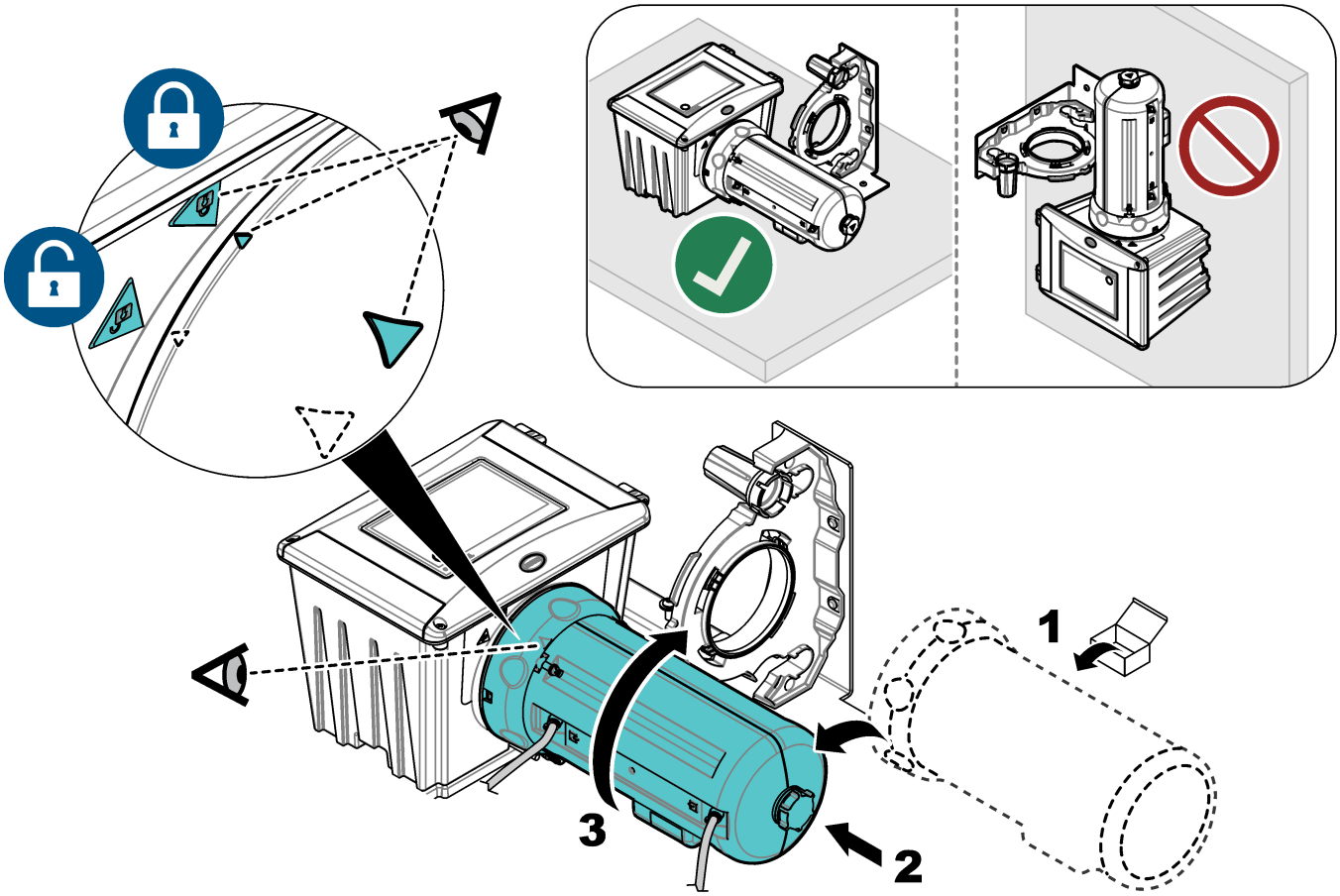


### 6.4.3 Mounting

**⚠WARNING**

Personal injury hazard. Make sure that the wall mounting is able to hold 4 times the weight of the equipment.

**⚠WARNING**

Personal injury hazard. Instruments or components are heavy. Use assistance to install or move.

Attach the panel on a flat, vertical wall surface in an indoor location away from direct sunlight. Install the instrument in a location and position where the user can easily disconnect the instrument from the power source.

Refer to Figure 47 for product dimensions. Refer to Figure 48 to attach the panel to a wall. Mounting hardware is supplied by the user.

**Figure 47 Product dimensions**

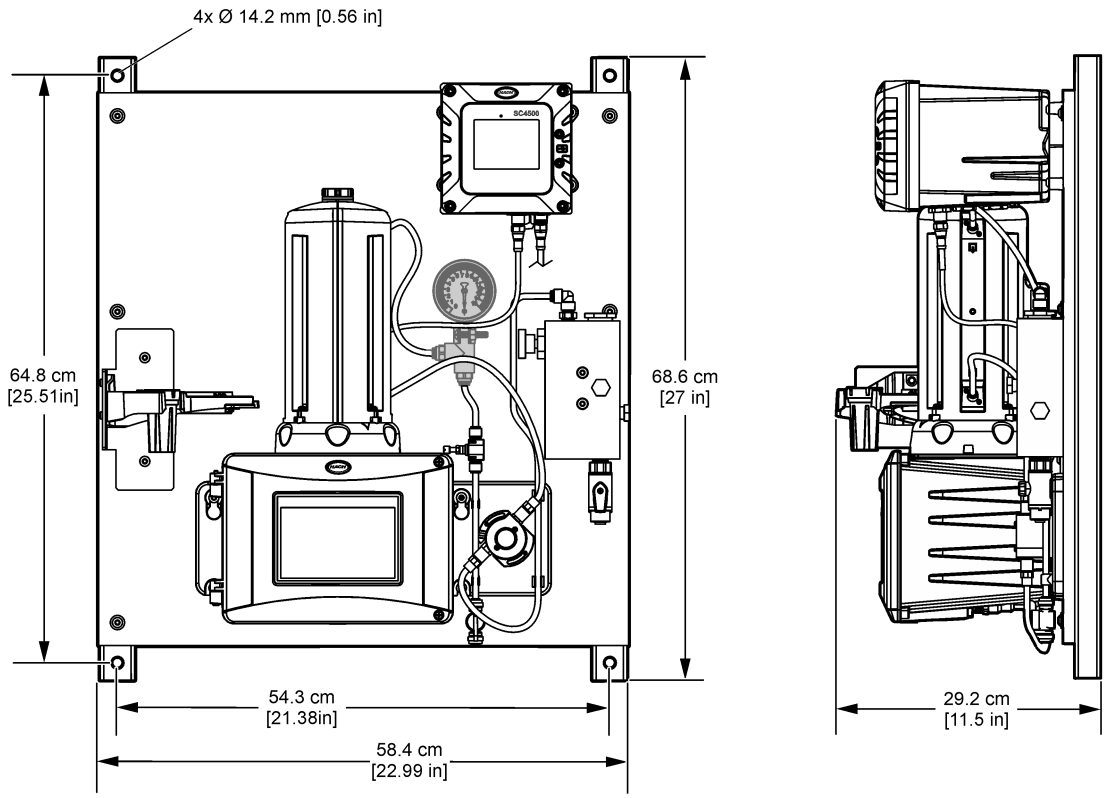


**Figure 48 Hang the panel on a wall**

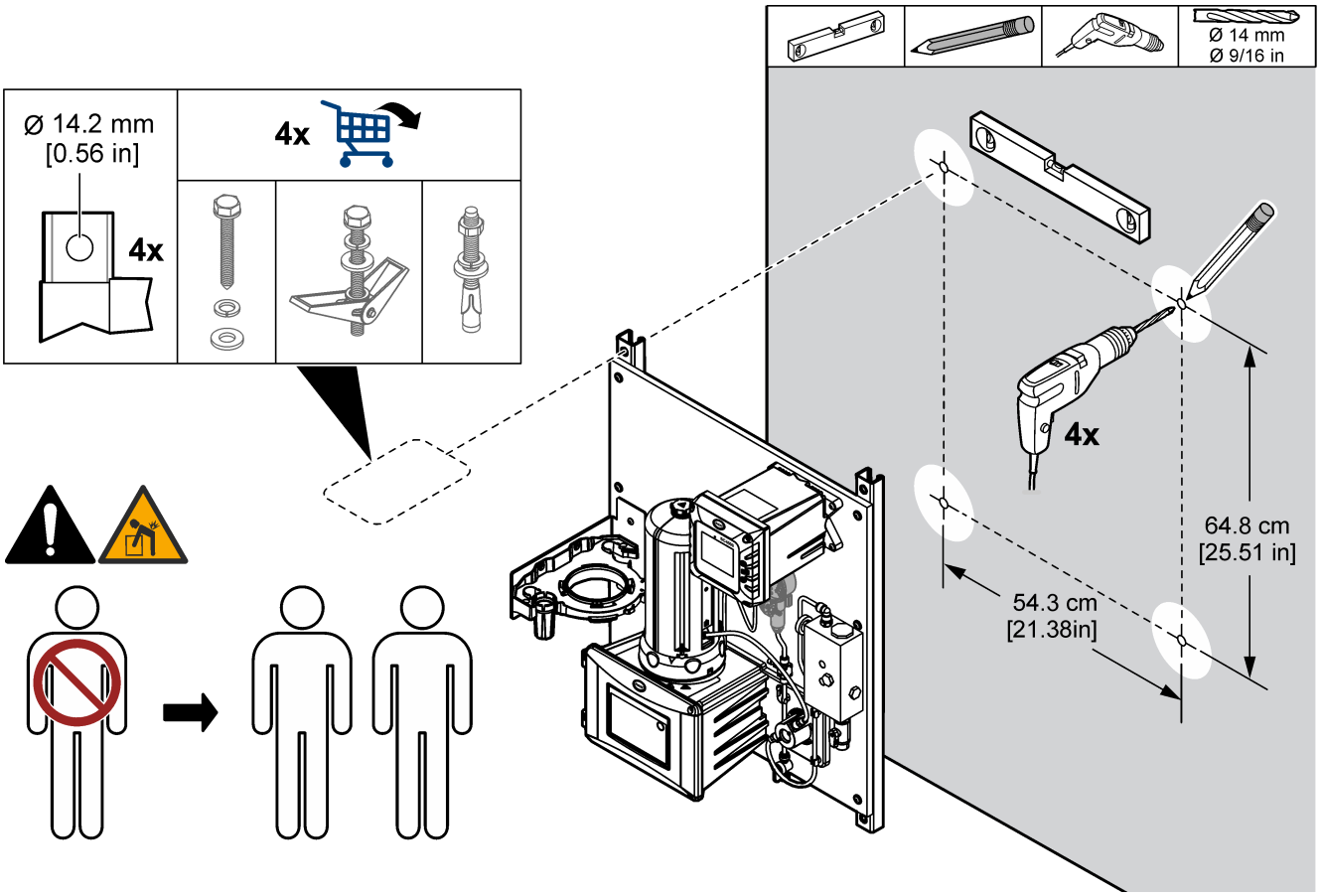

### 6.4.4 Install the sample and drain lines

Install the sample and drain tubing as shown in Figure 49. Make sure that the drain tubing has a constant downward slope to the external drain.

**Figure 49 Sample and drain connections**

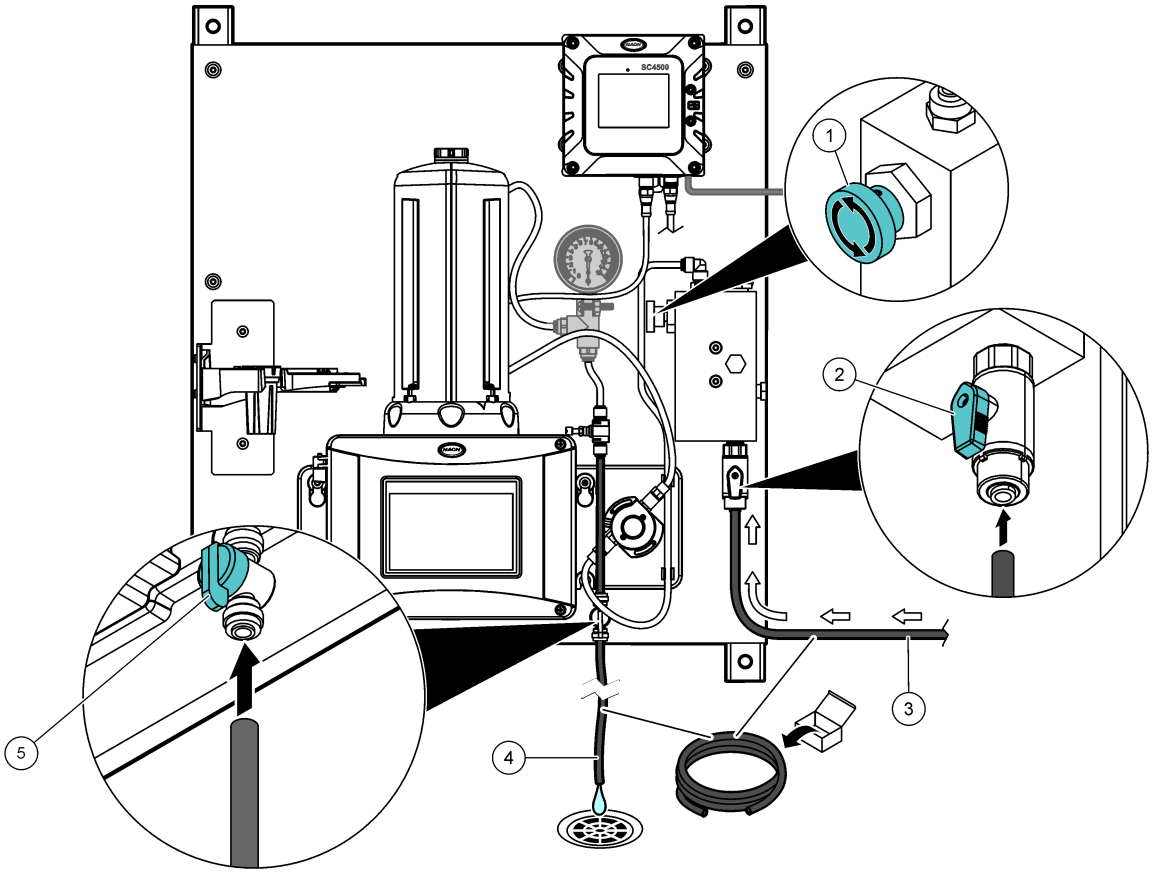


| | | |
|---|---|---|
| **1** Inlet needle valve | **3** Sample tubing | **5** Drain valve for bubble control |
| **2** Inlet ball valve | **4** Drain tubing | |

## 6.5 Startup

Make sure that all of the plumbing connections are complete before startup.

1. Open the sample inlet valve to let sample flow through the plumbing system. Make sure that the flow rate and pressure are within the limits. Refer to Specifications on page 62.
2. Examine the plumbing for fluid leaks. Stop the leaks if found.
3. Apply power to the controller. Refer to Figure 50. The display light comes on. The connected sensor shows on the display.

   ***Note:*** *To supply AC power to the controller with conduit, refer to the controller user manual.*
4. Set the flow rate as follows:

   a. Measure the flow rate with the flow regulator fully open. Make sure that the flow rate is in the middle of the flow specification. Refer to Specifications on page 62.

   b. Slowly close the flow regulator until the flow decreases by 20 to 30%.

   ***Note:*** *The flow regulator causes back pressure in the tubing and decreases the quantity of bubbles that can form in the vial.*
5. Let the panel operate for 4 to 6 hours until the measurements become stable.

**Figure 50 Apply power**

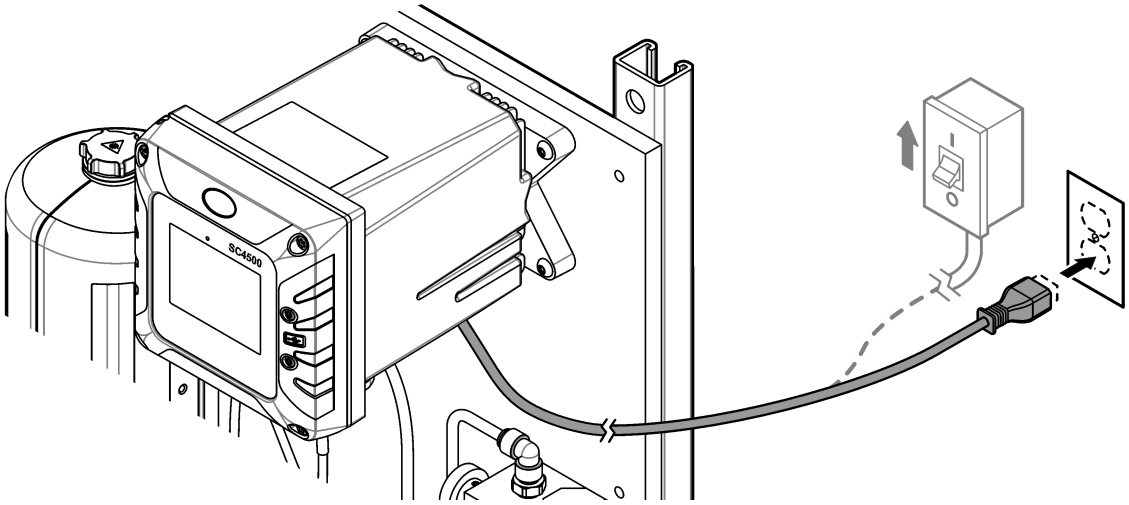


## 6.6 Operation

After the startup procedure is complete and the measurements are stable, monitor the measurements regularly. Measure grab samples to make sure that the measurements are accurate.

## 6.7 Replacement parts and accessories

***Note:*** *Product and Article numbers may vary for some selling regions. Contact the appropriate distributor or refer to the company website for contact information.*

| Description | Item no. |
|---|---|
| Tubing, 0.170-inch ID × 0.250-inch OD | 3061600A |

# Section 7 DPMP-TU5300

## 7.1 Product overview

The Dual Parameter Monitoring Panel for turbidity (109970) is an assembly of two turbidimeters that are plumbed and installed on a panel. Refer to Figure 51. The controller on the panel sends the data to a communications network for remote monitoring.

**Figure 51 DPMP-TU5300 (109970) overview**

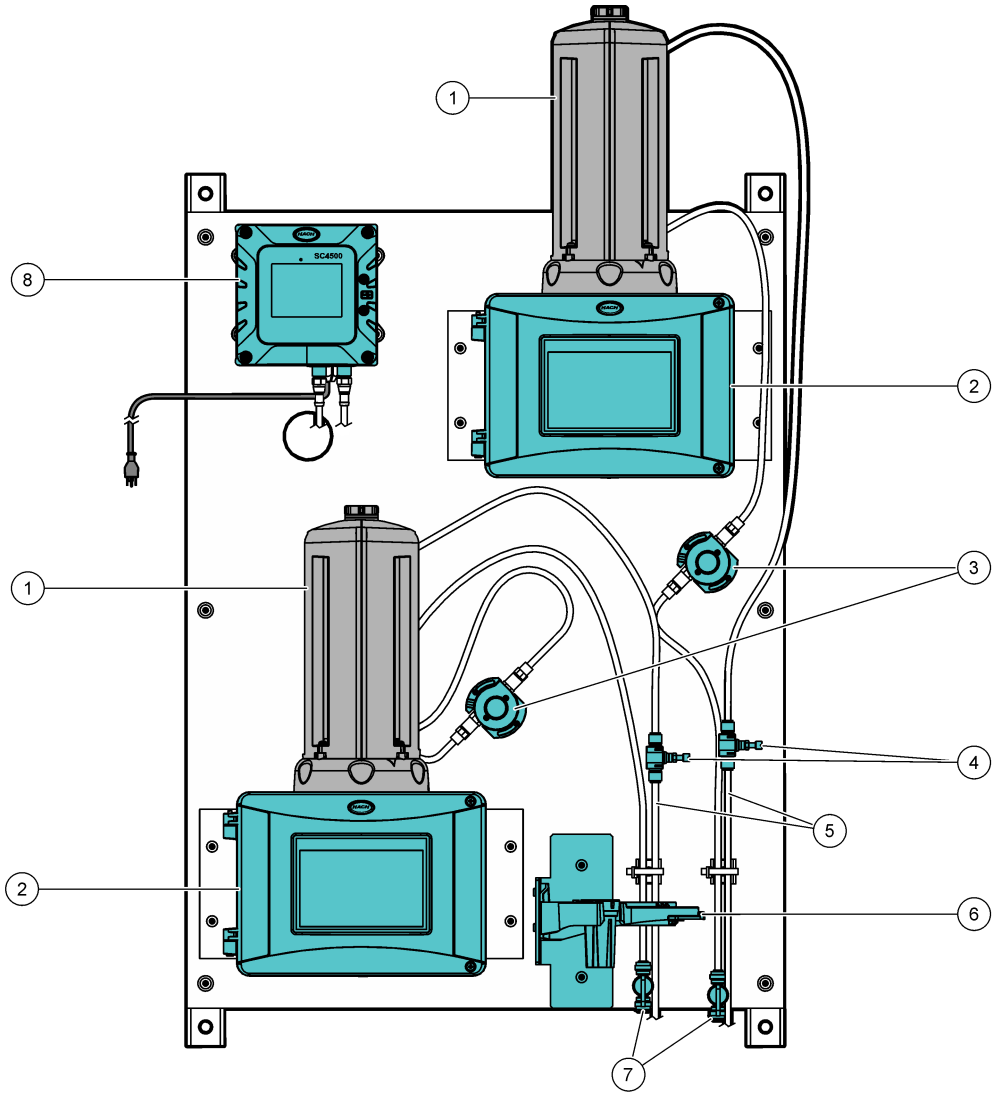


| | | | |
|---|---|---|---|
| **1** | Automatic Cleaning Module (ACM) | **5** | Drain tubing |
| **2** | TU5300sc Turbidimeter | **6** | Service bracket |
| **3** | Flow sensor | **7** | Inlet ball valve |
| **4** | Flow regulator | **8** | SC4500 Controller |

## 7.2 Specifications

Specifications are subject to change without notice. The specifications that follow are for the DPMP-TU5300 (109970) panel. Refer to the supplied user manuals for the controller and turbidimeter specifications.

| Specification | Details |
|---|---|
| Dimensions (W x H x D) | 61 x 106 x 29.1 cm (24 x 42 x 11.5 inch) |
| Weight | 19.9 kg (43.8 lb) |
| Power requirements | 100–240 VAC ±10%, 50/60 Hz; maximum 1 A |
| Sample flow rate | 100–1000 mL/minute; optimal flow rate: 200–500 mL/min |
| Sample pressure | 517 kPa (75 psi) maximum |
| Sample inlet connection | ¼-inch OD tube |
| Sample waste drain connection | ¼-inch OD tube |
| Certifications | SC4500 Controller is CE compliant and is TÜV listed to UL and CSA safety standards |

## 7.3 Product components

Make sure that all components have been received. Refer to Figure 52. If any items are missing or damaged, contact the manufacturer or a sales representative immediately.

**Figure 52 Product components**

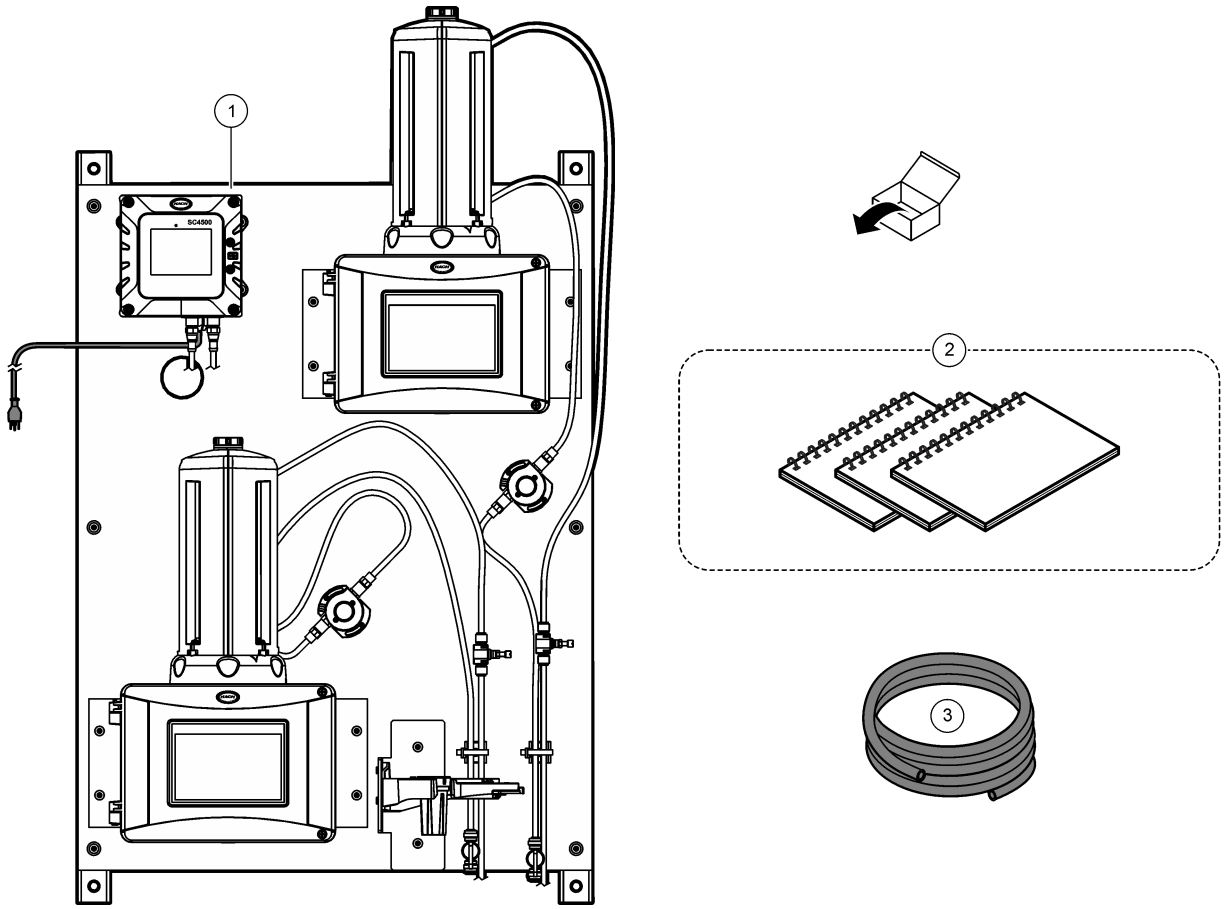


| | |
|---|---|
| **1** DPMP-TU5300 | **3** Tubing, 0.170-inch ID × 0.250-inch OD, 12 m (40 ft) |
| **2** Controller and turbidimeter user manuals | |

## 7.4 Installation

**⚠ WARNING**

Multiple hazards. Only qualified personnel must conduct the tasks described in this section of the document.

### 7.4.1 Install the ACM on the turbidimeter

If the panel includes the Automatic Cleaning Module (ACM), install the ACM with the panel in a horizontal position before the panel is mounted vertically on a wall. Refer to Figure 53.

**Figure 53 Install the ACM on the turbidimeter**

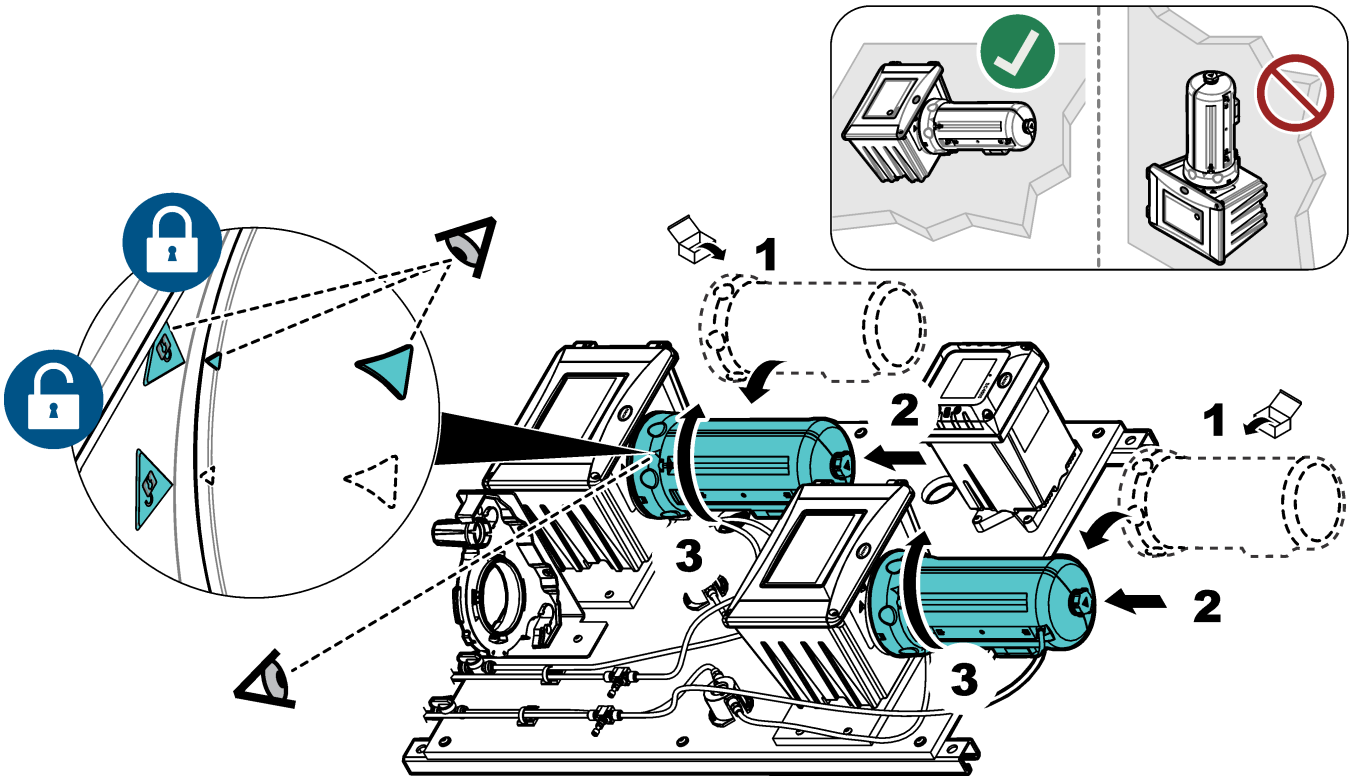


### 7.4.2 Mounting

**⚠WARNING**

Personal injury hazard. Make sure that the wall mounting is able to hold 4 times the weight of the equipment.

**⚠WARNING**

Personal injury hazard. Instruments or components are heavy. Use assistance to install or move.

Attach the panel on a flat, vertical wall surface in an indoor location away from direct sunlight. Install the instrument in a location and position where the user can easily disconnect the instrument from the power source.

Refer to Figure 54 for product dimensions. Refer to Figure 55 to attach the panel to a wall. Mounting hardware is supplied by the user.

**Figure 54 Product dimensions**

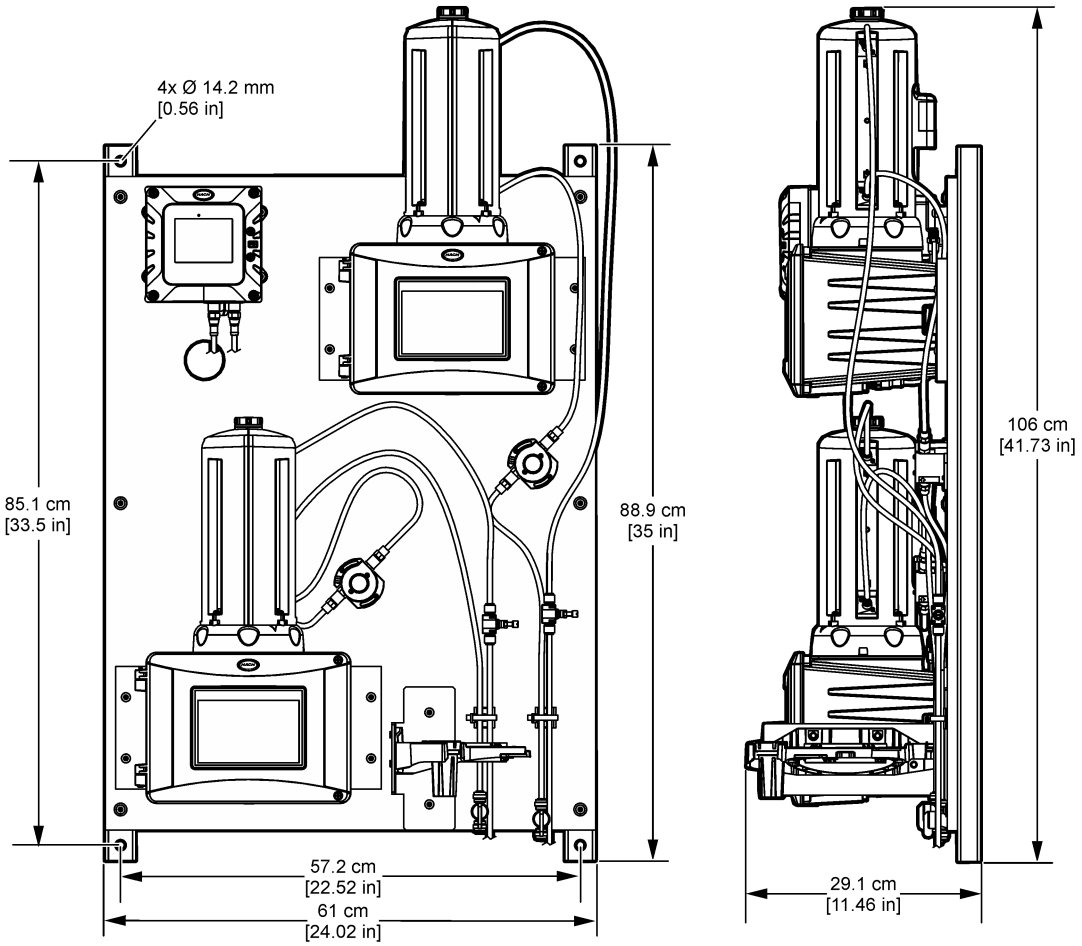

**Figure 55 Hang the panel on a wall**

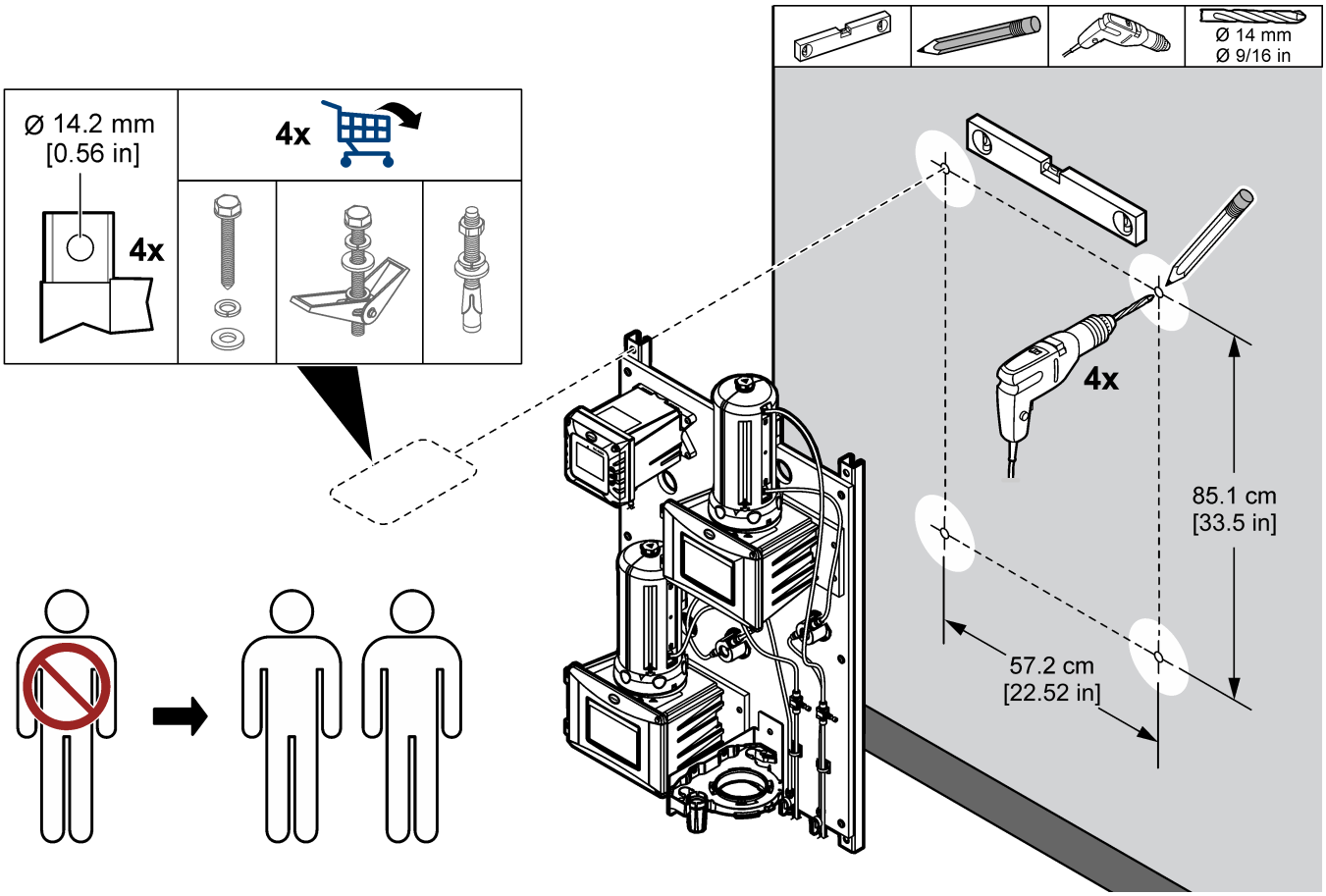


## 7.4.3 Install the sample and drain lines

Install the sample and drain tubing as shown in Figure 56. Make sure that the drain tubing has a constant downward slope to the external drain.

**Figure 56 Sample and drain connections**

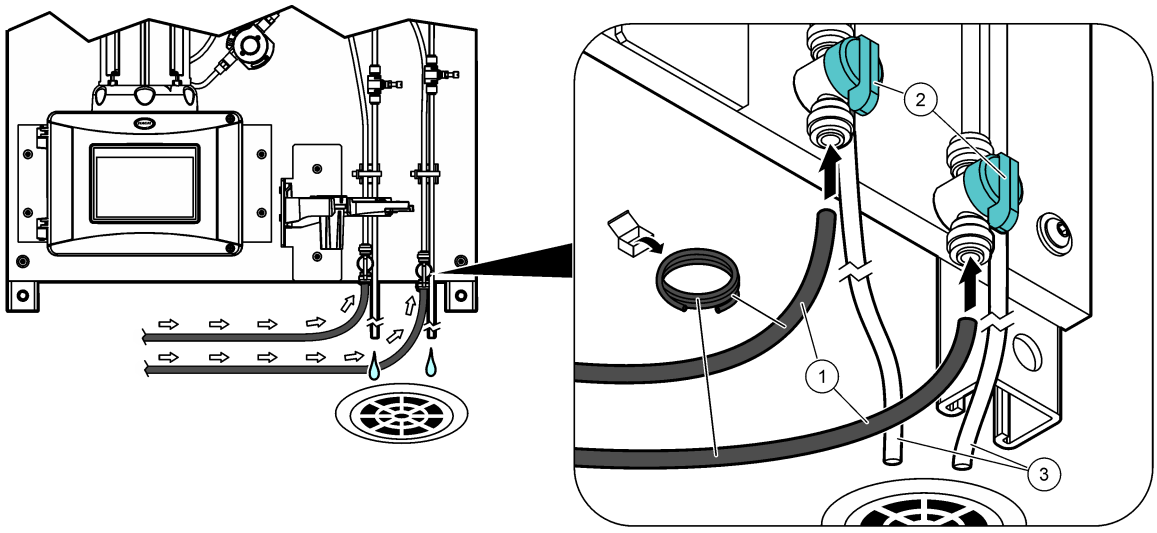


| | | |
|---|---|---|
| **1** Sample tubing | **2** Inlet ball valve | **3** Drain tubing |

## 7.5 Startup

Make sure that all of the plumbing connections are complete before startup.

1. Open the sample inlet valve to let sample flow through the plumbing system. Make sure that the flow rate and pressure are within the limits. Refer to Specifications on page 70.
2. Examine the plumbing for fluid leaks. Stop the leaks if found.
3. Apply power to the controller. Refer to Figure 57. The display light comes on. The connected sensor shows on the display.

   ***Note:*** *To supply AC power to the controller with conduit, refer to the controller user manual.*
4. Set the flow rate as follows:

   a. Measure the flow rate with the flow regulator fully open. Make sure that the flow rate is in the middle of the flow specification. Refer to Specifications on page 70.
   b. Slowly close the flow regulator until the flow decreases by 20 to 30%.

      ***Note:*** *The flow regulator causes back pressure in the tubing and decreases the quantity of bubbles that can form in the vial.*
5. Let the panel operate for 4 to 6 hours until the measurements become stable.

**Figure 57 Apply power**

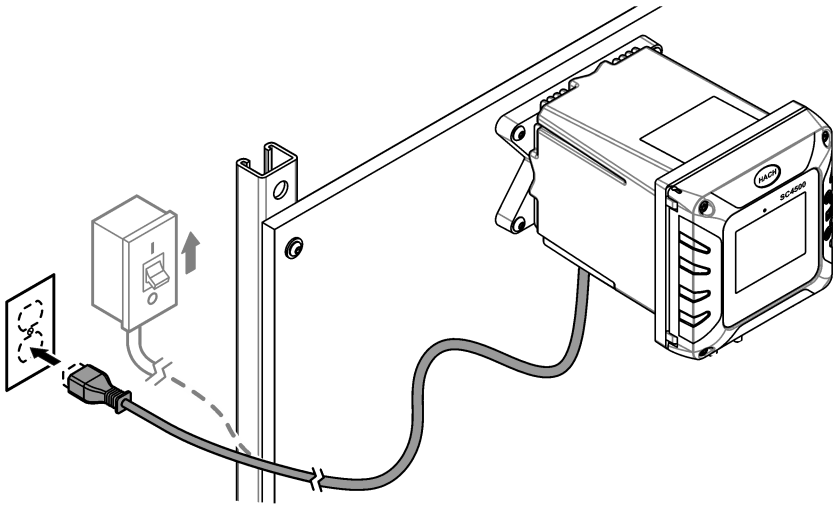

## 7.6 Operation

After the startup procedure is complete and the measurements are stable, monitor the measurements regularly. Measure grab samples to make sure that the measurements are accurate.

## 7.7 Replacement parts and accessories

***Note:*** *Product and Article numbers may vary for some selling regions. Contact the appropriate distributor or refer to the company website for contact information.*

| Description | Item no. |
|---|---|
| Tubing, 0.170-inch ID × 0.250-inch OD | 3061600A |

# Section 8 DPMP-CLPHD

## 8.1 Product overview

The Dual Parameter Monitoring Panel for chlorine and pH (DPMP-CLPHD) is a chlorine analyzer and pH sensor that are plumbed and installed on a panel. Refer to Figure 58. The controller on the panel sends the data to a communications network for remote monitoring.

**Figure 58 DPMP-CLPHD overview**

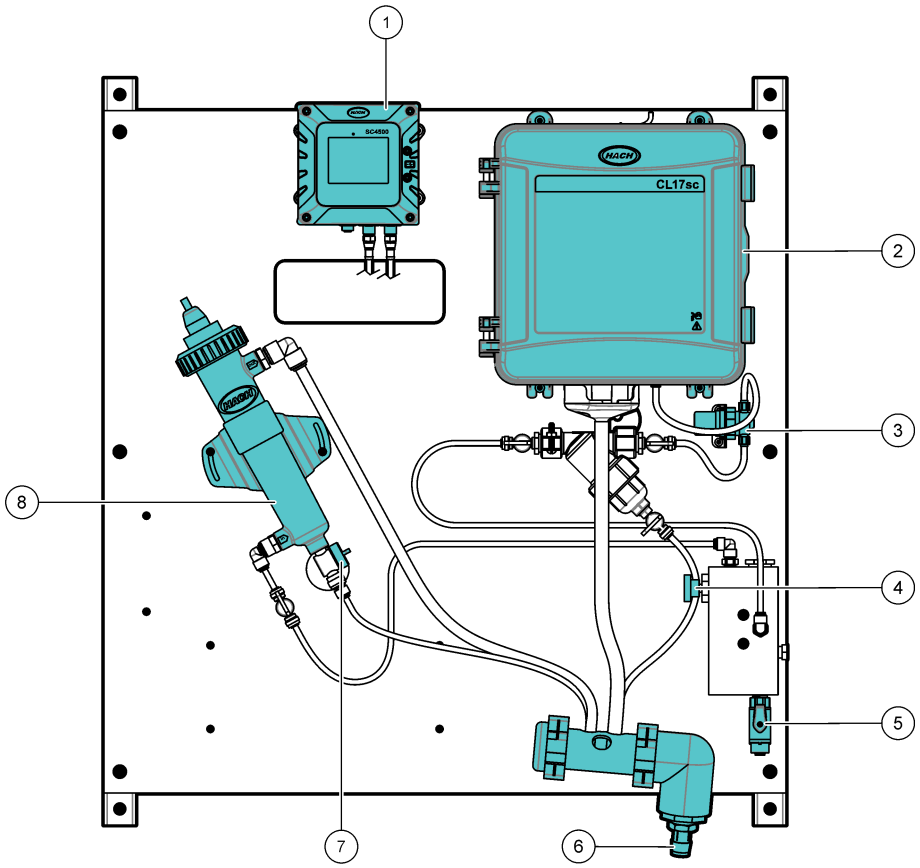


| | |
|---|---|
| **1** SC4500 Controller | **5** Inlet ball valve |
| **2** CL17sc chlorine analyzer | **6** Drain manifold |
| **3** Pressure regulator | **7** Maintenance drain valve |
| **4** Inlet needle valve | **8** Flow cell with pH sensor |

## 8.2 Specifications

Specifications are subject to change without notice. The specifications that follow are for the DPMP-CLPHD panel. Refer to the supplied user manuals for the controller, analyzer and sensor specifications.

| Specification | Details |
|---|---|
| Dimensions (W x H x D) | 33 x 71.1 x 21.8 cm (13 x 28 x 8.6 inch) |
| Weight | 19.3 kg (42.5 lb) |
| Power requirements | 100–240 VAC ±10%, 50/60 Hz; maximum 1 A |
| Sample flow rate | 600 to 800 mL/min |
| Sample pressure | 31 to 517 kPa (4.5 to 75 psi) |

| Specification | Details |
|---|---|
| Sample inlet connection | ¼-inch OD tube |
| Sample waste drain connection | ¼-inch OD tube |
| Certifications | SC4500 Controller is CE compliant and is TÜV listed to UL and CSA safety standards |

## 8.3 Product components

Make sure that all components have been received. Refer to Figure 59. If any items are missing or damaged, contact the manufacturer or a sales representative immediately.

**Figure 59 Product components**

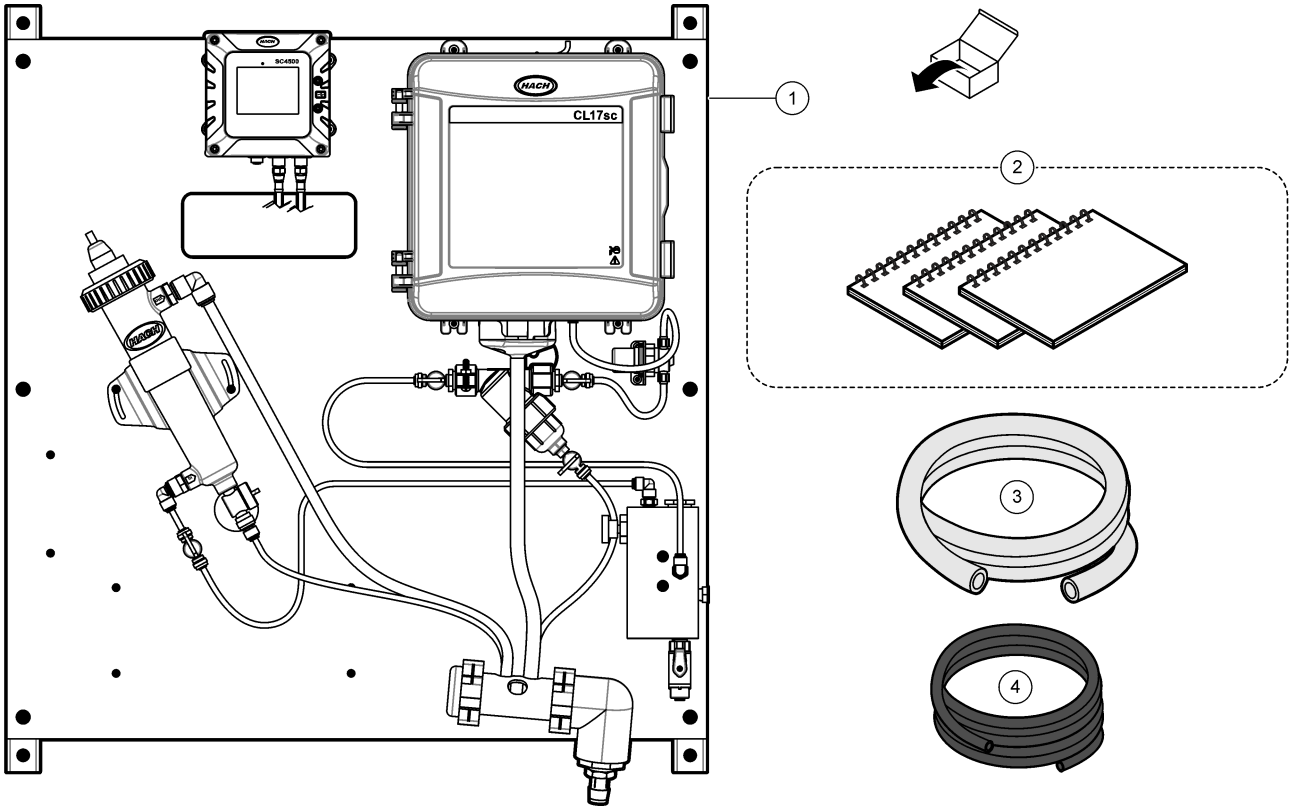


| | | | |
|---|---|---|---|
| **1** | DPMP-CLPHD | **3** | Tubing, drain, ¾-inch ID × 1-inch OD, 1.8 m (6 ft) |
| **2** | User manuals | **4** | Tubing, 0.170-inch ID × 0.250-inch OD, 3 m (10 ft) |

## 8.4 Installation

**⚠ WARNING**

Multiple hazards. Only qualified personnel must conduct the tasks described in this section of the document.

### 8.4.1 Mounting

**⚠ WARNING**

Personal injury hazard. Make sure that the wall mounting is able to hold 4 times the weight of the equipment.

**⚠WARNING**

Personal injury hazard. Instruments or components are heavy. Use assistance to install or move.

Attach the panel on a flat, vertical wall surface in an indoor location away from direct sunlight. Install the instrument in a location and position where the user can easily disconnect the instrument from the power source. Refer to Figure 60 for product dimensions. Refer to Figure 61 to attach the panel to a wall. Mounting hardware is supplied by the user.

**Figure 60 Product dimensions**

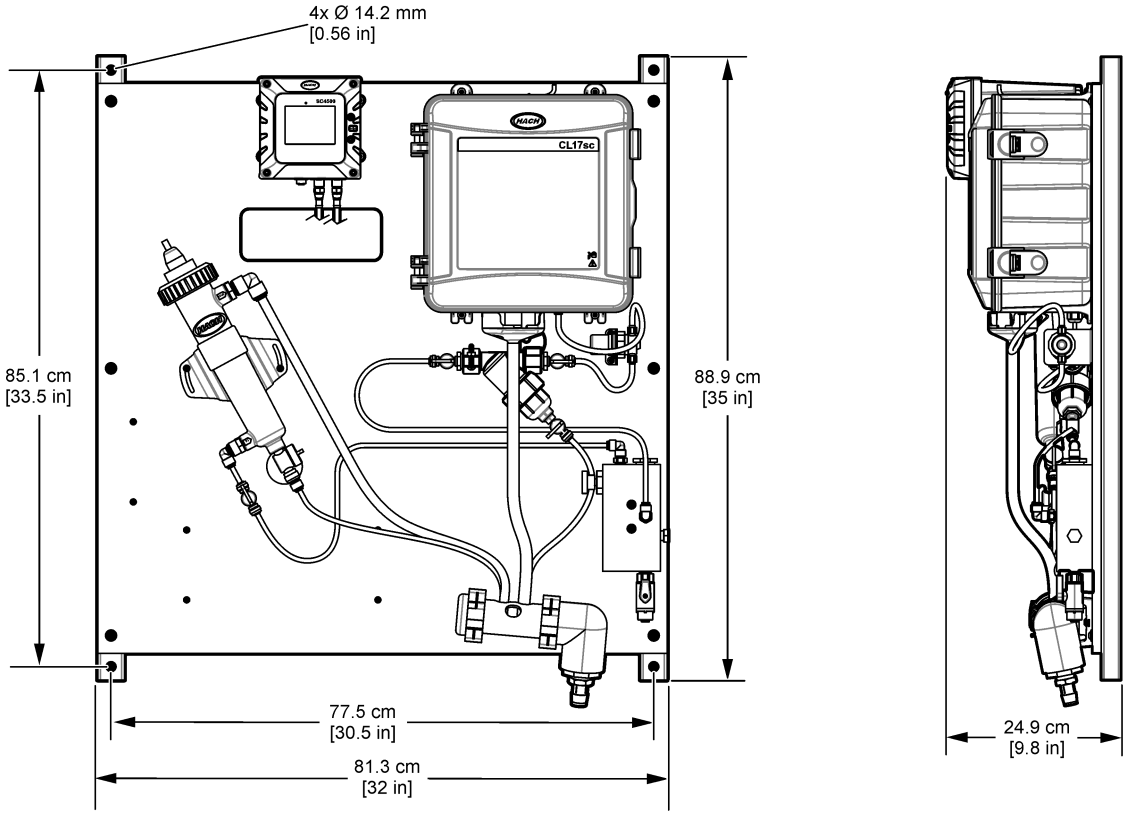

**Figure 61 Hang the panel on a wall**

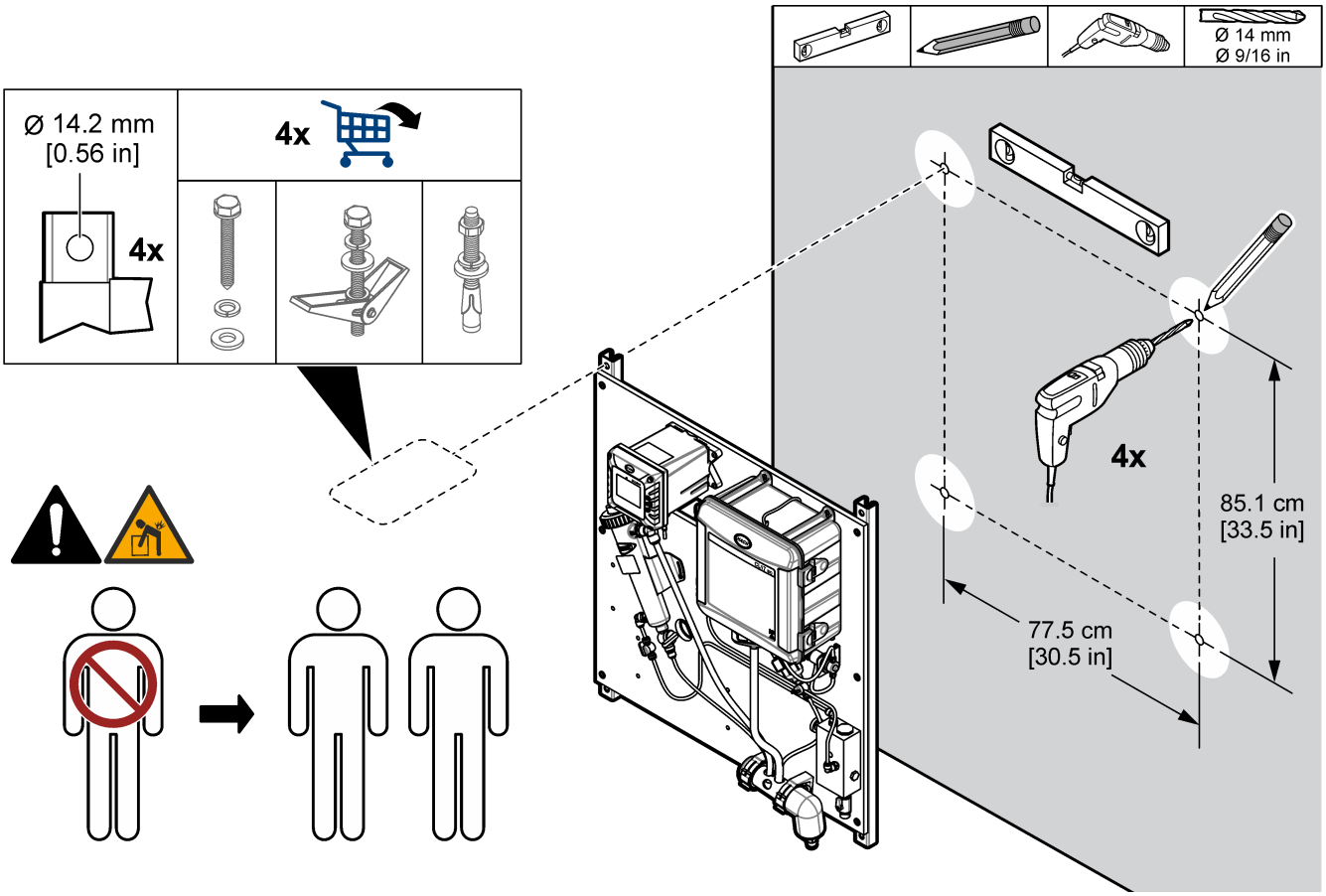

## 8.4.2 Install the sample and drain lines

Install the sample and drain tubing as shown in Figure 62. Make sure that the drain tubing has a constant downward slope to the external drain.

**Figure 62 Sample and drain connections**

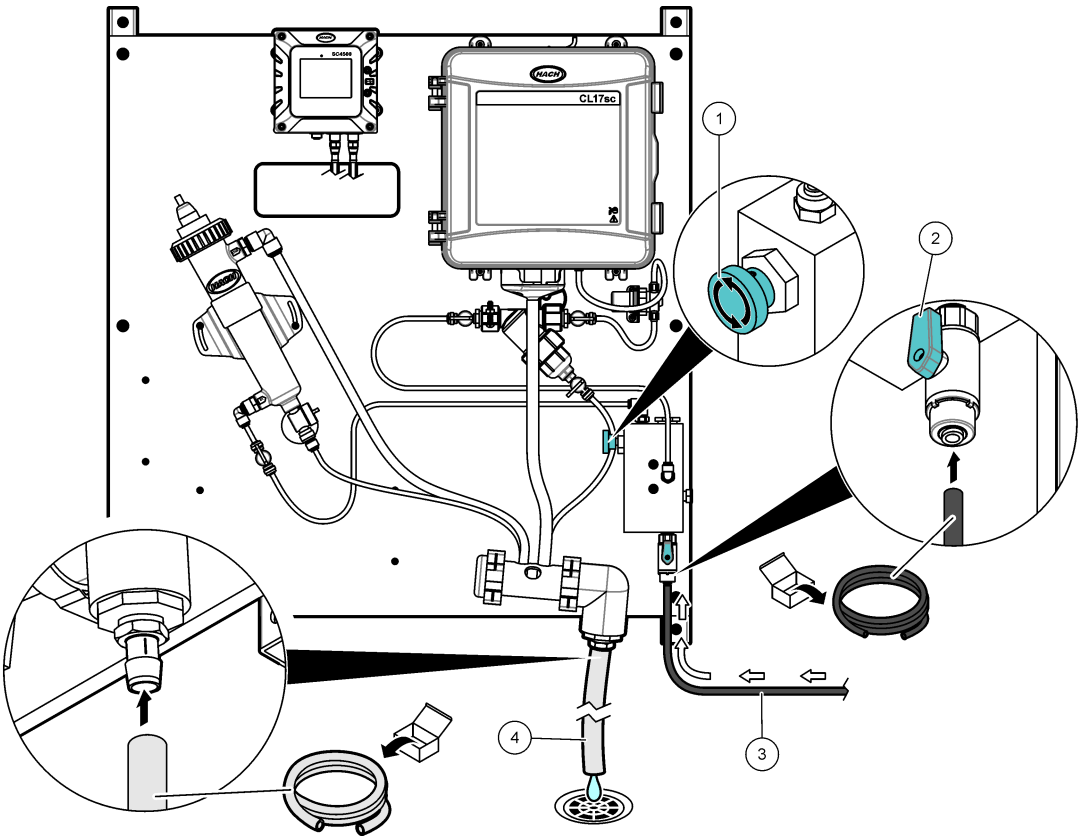


| | |
|---|---|
| **1** Inlet needle valve | **3** Sample tubing |
| **2** Inlet ball valve | **4** Drain tubing |

### 8.4.3 Remove the cap from the pH sensor

Remove the protective cap from the pH sensor before startup. Refer to Figure 63.

***Note:*** *During cold weather, the manufacturer may send the pH sensor in a different package.*

**Figure 63 Remove the cap from the pH sensor**

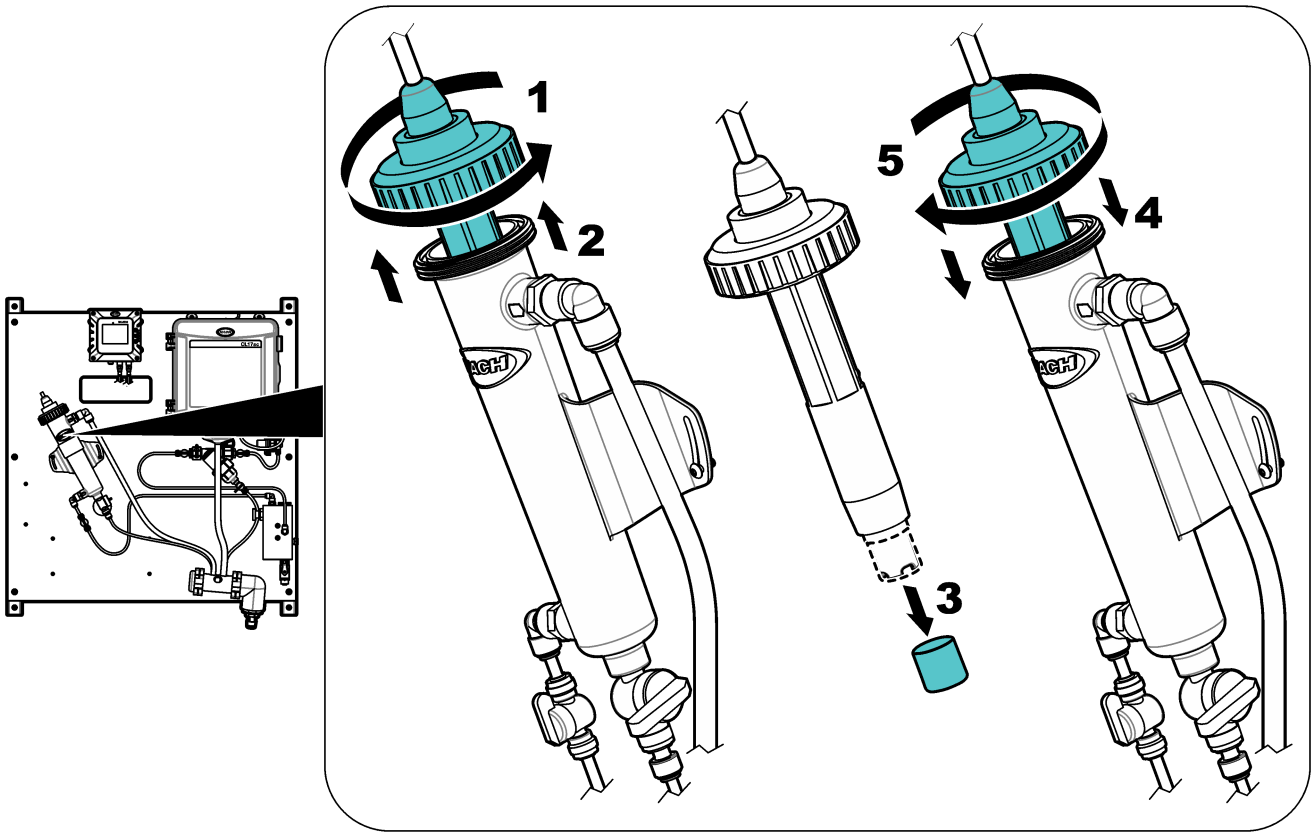


## 8.5 Startup

Make sure that all of the plumbing connections are complete before startup.

1. Install the reagents and stir bar in the CL17sc analyzer. Refer to the CL17sc chlorine analyzer user manual.
2. Open the sample inlet valve to let sample flow through the plumbing system. Make sure that the flow rate and pressure are within the limits. Refer to Specifications on page 77.
3. Examine the plumbing for fluid leaks. Stop the leaks if found.
4. Apply power to the controller. Refer to Figure 64. The display light comes on. The analyzer shows on the display.

   ***Note:*** *To supply AC power to the controller with conduit, refer to the controller user manual.*
5. Start the prime operation for the chlorine analyzer reagents. Refer to the CL17sc chlorine analyzer user manual for instructions.
6. Let the panel operate for 4 to 6 hours until the measurements become stable.

**Figure 64 Apply power**

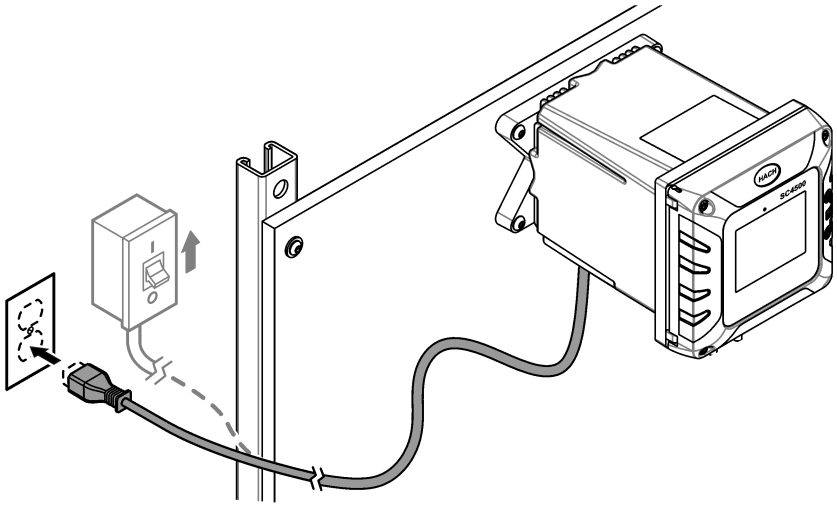

## 8.6 Operation

After the startup procedure is complete and the measurements are stable, monitor the measurements regularly. Measure grab samples to make sure that the measurements are accurate.

## 8.7 Replacement parts and accessories

***Note:*** *Product and Article numbers may vary for some selling regions. Contact the appropriate distributor or refer to the company website for contact information.*

| Description | Item no. |
|---|---|
| Tubing, 0.170-inch ID × 0.250-inch OD | 3061600A |

# Section 9 DPMP-CLTU

## 9.1 Product overview

The Dual Parameter Monitoring Panel for chlorine and turbidity (DPMP-CLTU) is a chlorine analyzer and turbidimeter that are plumbed and installed on a panel. Refer to Figure 65. The controller on the panel sends the data to a communications network for remote monitoring.

**Figure 65 DPMP-CLTU overview**

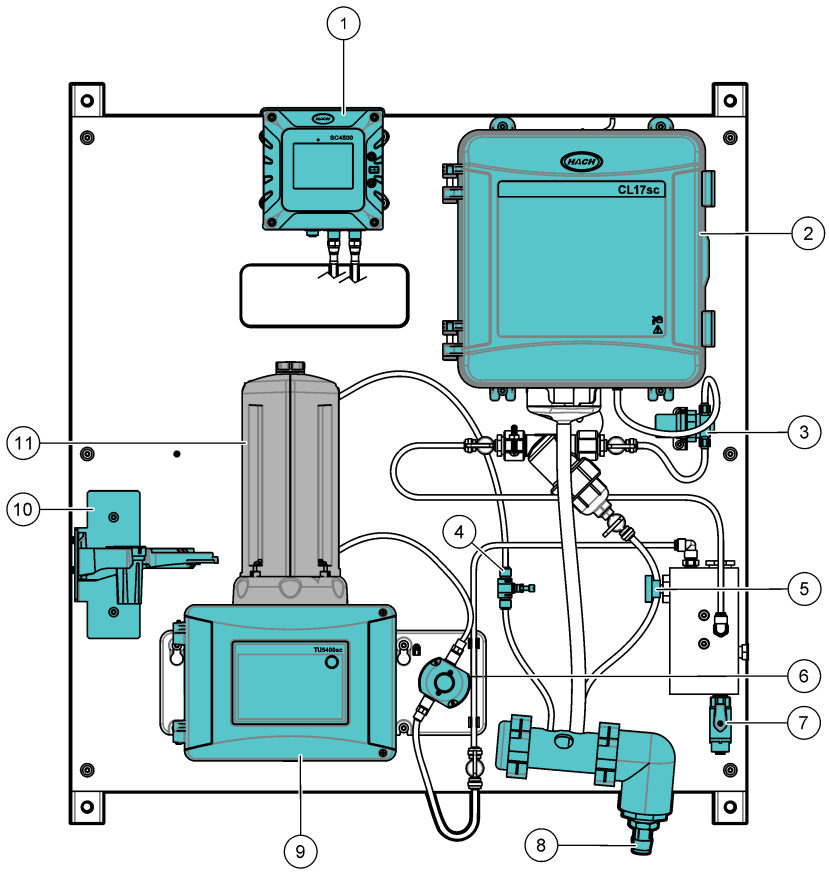


| | |
|---|---|
| **1** SC4500 Controller | **7** Inlet ball valve |
| **2** CL17sc chlorine analyzer | **8** Drain manifold |
| **3** Pressure regulator | **9** TU5300sc Turbidimeter |
| **4** Flow regulator | **10** Service bracket |
| **5** Inlet needle valve | **11** Automatic Cleaning Module (ACM) |
| **6** Flow sensor | |

## 9.2 Specifications

Specifications are subject to change without notice. The specifications that follow are for the DPMP-CLTU panel. Refer to the supplied user manuals for the controller, analyzer and turbidimeter specifications.

| Specification | Details |
|---|---|
| Dimensions (W x H x D) | 33 x 71.1 x 21.8 cm (13 x 28 x 8.6 inch) |
| Weight | 22.5 kg (49.5 lb) |
| Power requirements | 100–240 VAC ±10%, 50/60 Hz; maximum 1 A |

| Specification | Details |
|---|---|
| Sample flow rate | 200 to 1000 mL/min |
| Sample pressure | 31 to 517 kPa (4.5 to 75 psi) |
| Sample inlet connection | ¼-inch OD tube |
| Sample waste drain connection | ¾-inch ID hose barb |
| Certifications | SC4500 Controller is CE compliant and is TÜV listed to UL and CSA safety standards |

## 9.3 Product components

Make sure that all components have been received. Refer to Figure 66. If any items are missing or damaged, contact the manufacturer or a sales representative immediately.

**Figure 66 Product components**

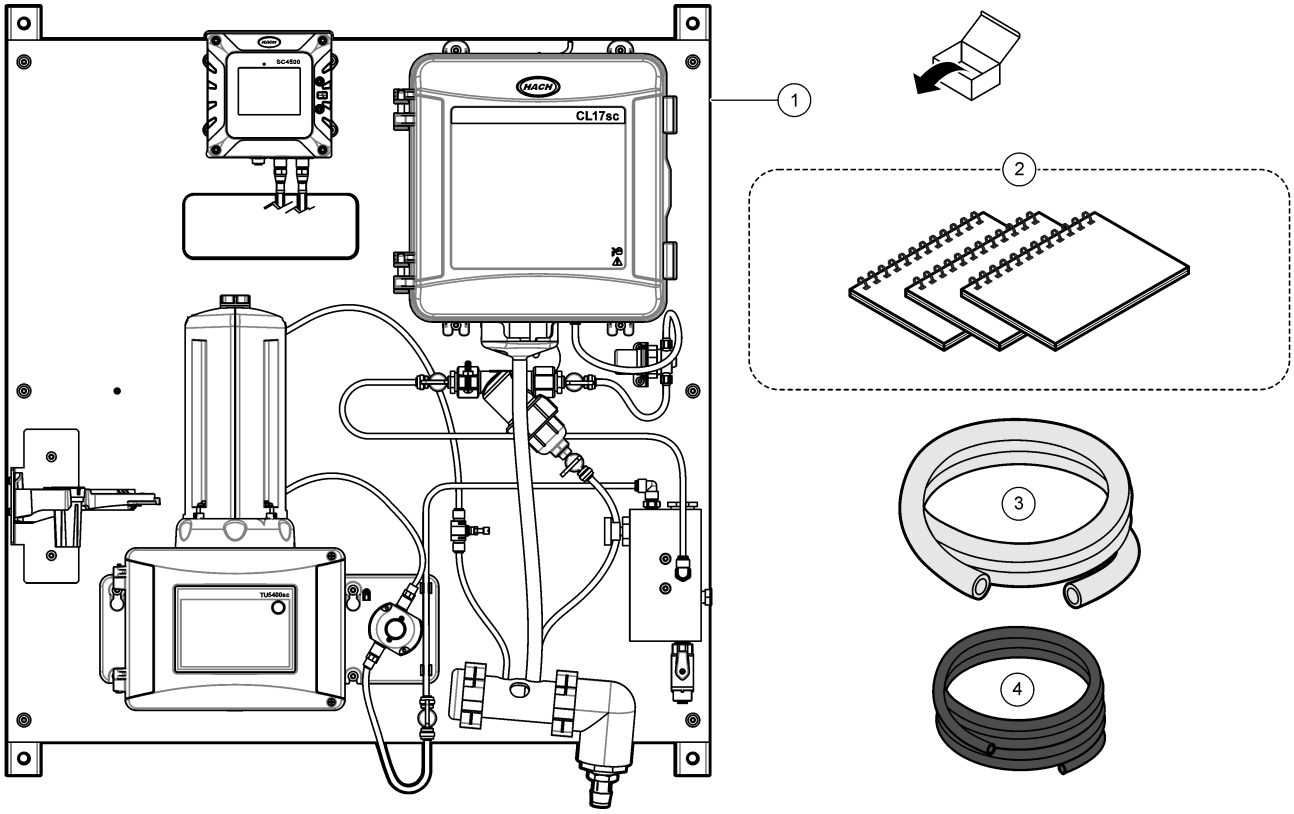


| | | | |
|---|---|---|---|
| **1** | DPMP-CLTU | **3** | Tubing, drain, ¾-inch ID × 1-inch OD, 1.8 m (6 ft) |
| **2** | User manuals | **4** | Tubing, 0.170-inch ID × 0.250-inch OD, 3 m (10 ft) |

## 9.4 Installation

**⚠WARNING**

Multiple hazards. Only qualified personnel must conduct the tasks described in this section of the document.

### 9.4.1 Install the ACM on the turbidimeter

If the panel includes the Automatic Cleaning Module (ACM), install the ACM with the panel in a horizontal position before the panel is mounted vertically on a wall. Refer to Figure 67.

**Figure 67 Install the ACM on the turbidimeter**

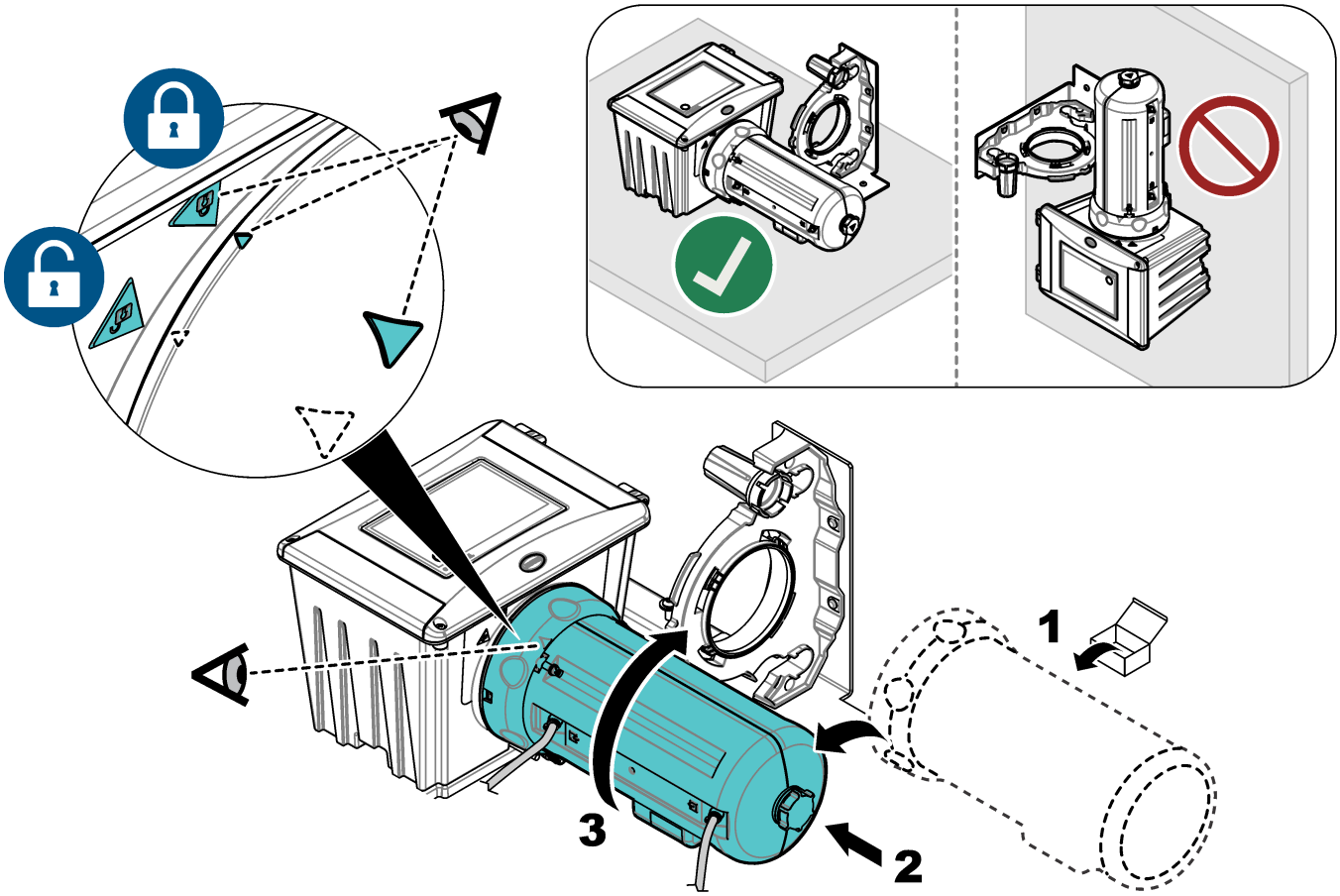


### 9.4.2 Mounting

**⚠WARNING**

Personal injury hazard. Make sure that the wall mounting is able to hold 4 times the weight of the equipment.

**⚠WARNING**

Personal injury hazard. Instruments or components are heavy. Use assistance to install or move.

Attach the panel on a flat, vertical wall surface in an indoor location away from direct sunlight. Install the instrument in a location and position where the user can easily disconnect the instrument from the power source. Refer to Figure 68 for product dimensions. Refer to Figure 69 to attach the panel to a wall. Mounting hardware is supplied by the user.

**Figure 68 Product dimensions**

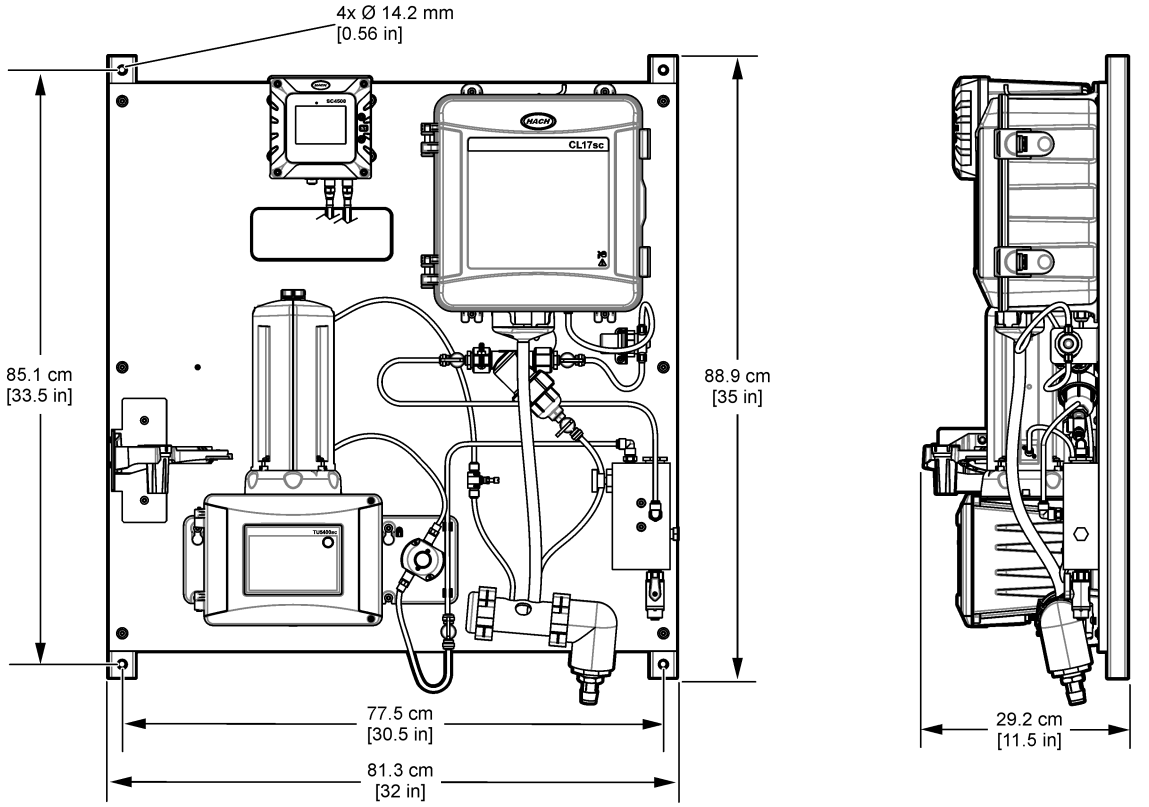


**Figure 69 Hang the panel on a wall**

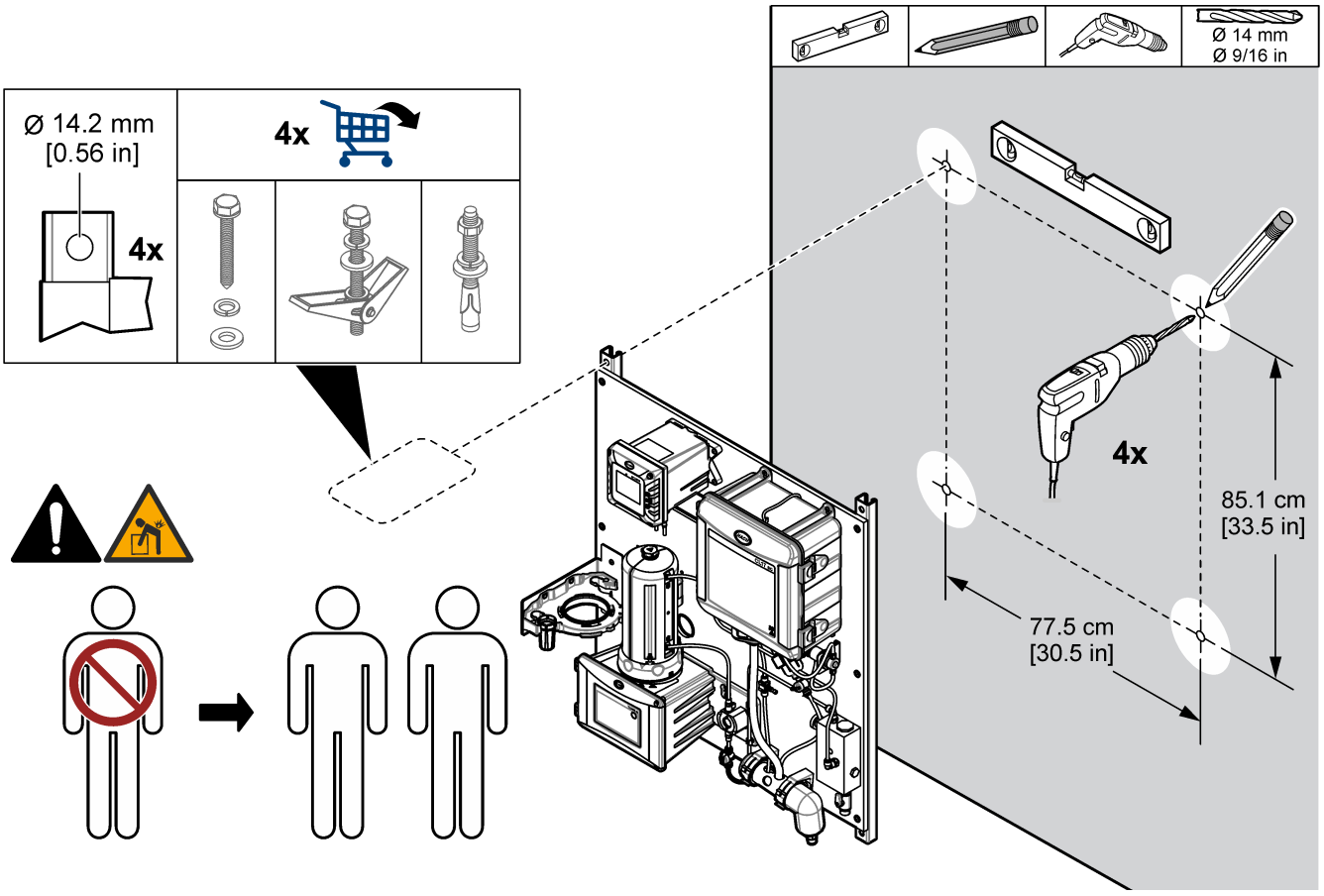

### 9.4.3 Install the sample and drain lines

Install the sample and drain tubing as shown in Figure 70. Make sure that the drain tubing has a constant downward slope to the external drain.

**Figure 70 Sample and drain connections**

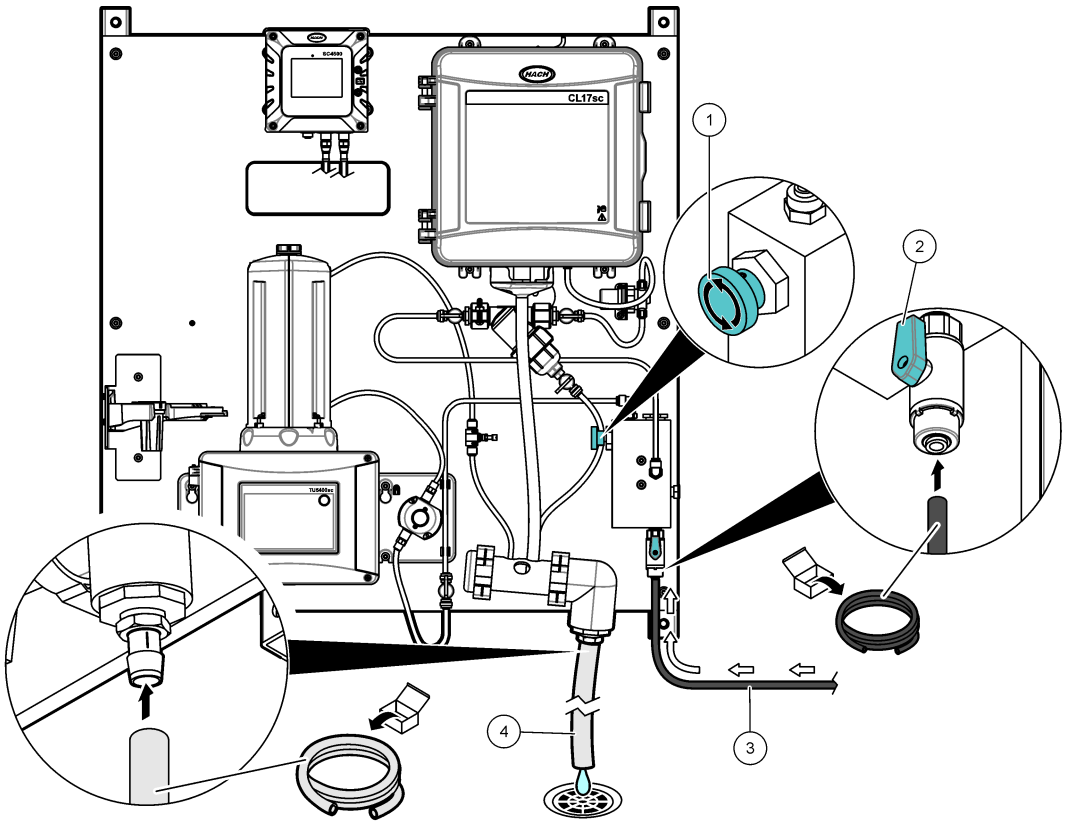


| | |
|---|---|
| **1** Inlet needle valve | **3** Sample tubing |
| **2** Inlet ball valve | **4** Drain tubing |

## 9.5 Startup

Make sure that all of the plumbing connections are complete before startup.

1. Install the reagents and stir bar in the CL17sc analyzer. Refer to the CL17sc chlorine analyzer user manual.
2. Open the sample inlet valve to let sample flow through the plumbing system. Make sure that the flow rate and pressure are within the limits. Refer to Specifications on page 85.
3. Examine the plumbing for fluid leaks. Stop the leaks if found.
4. Apply power to the controller. Refer to Figure 71. The display light comes on. The connected sensor shows on the display.

   ***Note:*** *To supply AC power to the controller with conduit, refer to the controller user manual.*
5. Set the flow rate as follows:

   a. Measure the flow rate with the flow regulator fully open. Make sure that the flow rate is in the middle of the flow specification. Refer to Specifications on page 85.

   b. Slowly close the flow regulator until the flow decreases by 20 to 30%.

      ***Note:*** *The flow regulator causes back pressure in the tubing and decreases the quantity of bubbles that can form in the vial.*

6. Start the prime operation for the chlorine analyzer reagents. Refer to the CL17sc chlorine analyzer user manual for instructions.
7. Let the panel operate for 4 to 6 hours until the measurements become stable.

**Figure 71 Apply power**

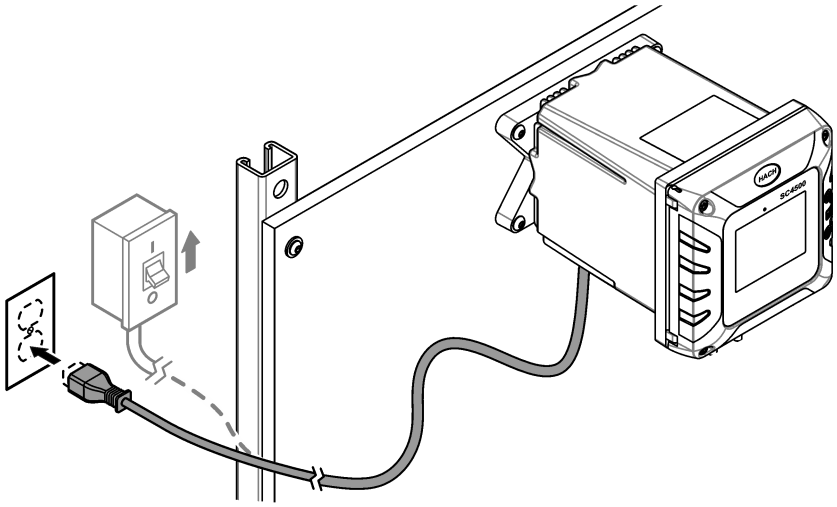

## 9.6 Operation

After the startup procedure is complete and the measurements are stable, monitor the measurements regularly. Measure grab samples to make sure that the measurements are accurate.

## 9.7 Replacement parts and accessories

***Note:*** *Product and Article numbers may vary for some selling regions. Contact the appropriate distributor or refer to the company website for contact information.*

| Description | Item no. |
|---|---|
| Tubing, 0.170-inch ID × 0.250-inch OD | 3061600A |

# Section 10 DPMP-TUPHD

## 10.1 Product overview

The Dual Parameter Monitoring Panel for turbidity and pH (DPMP-TUPHD) is a turbidimeter and pH sensor that are plumbed and installed on a panel. Refer to Figure 72. The controller on the panel sends the data to a communications network for remote monitoring.

**Figure 72 DPMP-TUPHD overview**

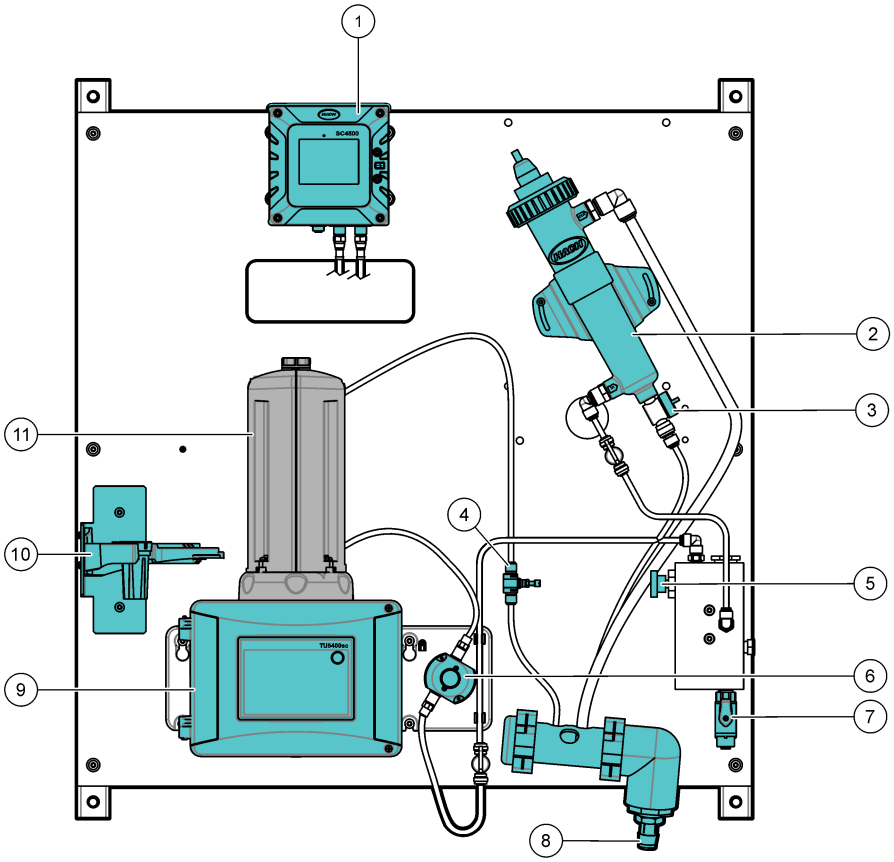


| | |
|---|---|
| **1** SC4500 Controller | **7** Inlet ball valve |
| **2** Flow cell with pH sensor | **8** Drain manifold |
| **3** Maintenance drain valve | **9** TU5300sc Turbidimeter |
| **4** Flow regulator | **10** Service bracket |
| **5** Inlet needle valve | **11** Automatic Cleaning Module (ACM) |
| **6** Flow sensor | |

## 10.2 Specifications

Specifications are subject to change without notice. The specifications that follow are for the DPMP-TUPHD panel. Refer to the supplied user manuals for the controller, turbidimeter and sensor specifications.

| Specification | Details |
|---|---|
| Dimensions (W x H x D) | 33 x 71.1 x 29.2 cm (13 x 28 x 11.5 inch) |
| Weight | 22.5 kg (49.5 lb) |
| Power requirements | 100–240 VAC ±10%, 50/60 Hz; maximum 1 A |

| Specification | Details |
|---|---|
| Sample flow rate | 500 to 2000 mL/min |
| Sample pressure | 31 to 517 kPa (4.5 to 75 psi) |
| Sample inlet connection | ¼-inch OD tube |
| Sample waste drain connection | ¾-inch ID hose barb |
| Certifications | SC4500 Controller is CE compliant and is TÜV listed to UL and CSA safety standards |

## 10.3 Product components

Make sure that all components have been received. Refer to Figure 73. If any items are missing or damaged, contact the manufacturer or a sales representative immediately.

**Figure 73 Product components**

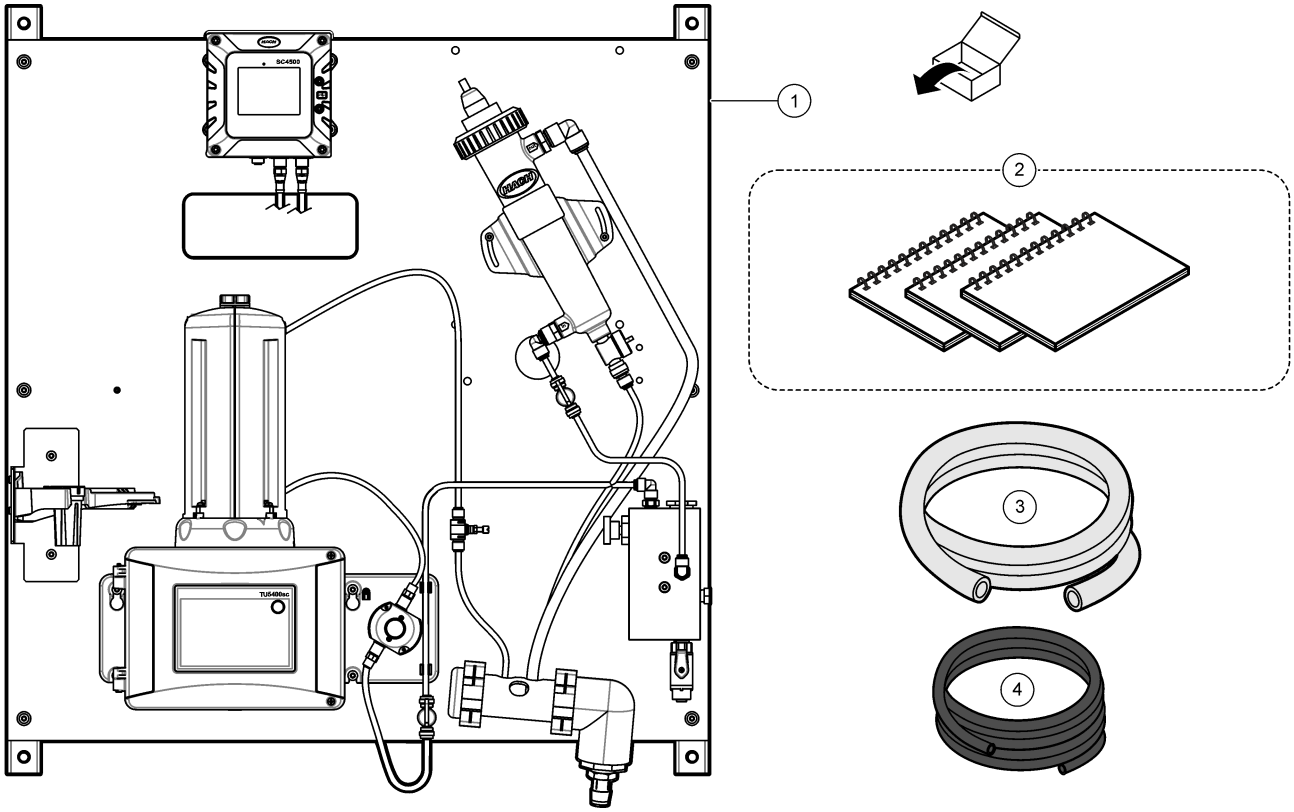


| | |
|---|---|
| **1** DPMP-TUPHD | **3** Tubing, drain, ¾-inch ID × 1-inch OD, 1.8 m (6 ft) |
| **2** User manuals | **4** Tubing, 0.170-inch ID × 0.250-inch OD, 3 m (10 ft) |

## 10.4 Installation

**⚠WARNING**

Multiple hazards. Only qualified personnel must conduct the tasks described in this section of the document.

### 10.4.1 Install the ACM on the turbidimeter

If the panel includes the Automatic Cleaning Module (ACM), install the ACM with the panel in a horizontal position before the panel is mounted vertically on a wall. Refer to Figure 74.

**Figure 74 Install the ACM on the turbidimeter**

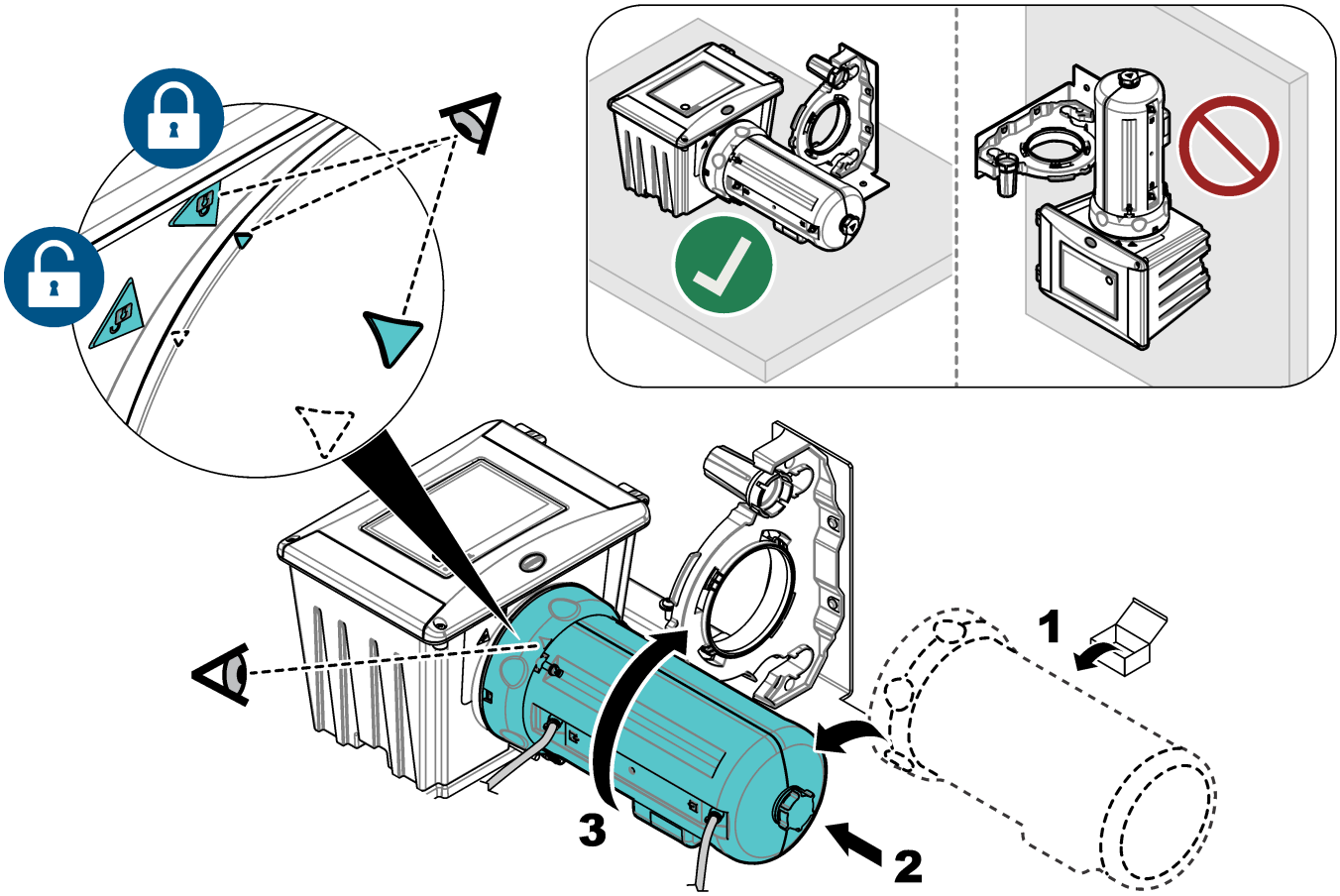


### 10.4.2 Mounting

**⚠WARNING**

Personal injury hazard. Make sure that the wall mounting is able to hold 4 times the weight of the equipment.

**⚠WARNING**

Personal injury hazard. Instruments or components are heavy. Use assistance to install or move.

Attach the panel on a flat, vertical wall surface in an indoor location away from direct sunlight. Install the instrument in a location and position where the user can easily disconnect the instrument from the power source. Refer to Figure 75 for product dimensions. Refer to Figure 76 to attach the panel to a wall. Mounting hardware is supplied by the user.

**Figure 75 Product dimensions**

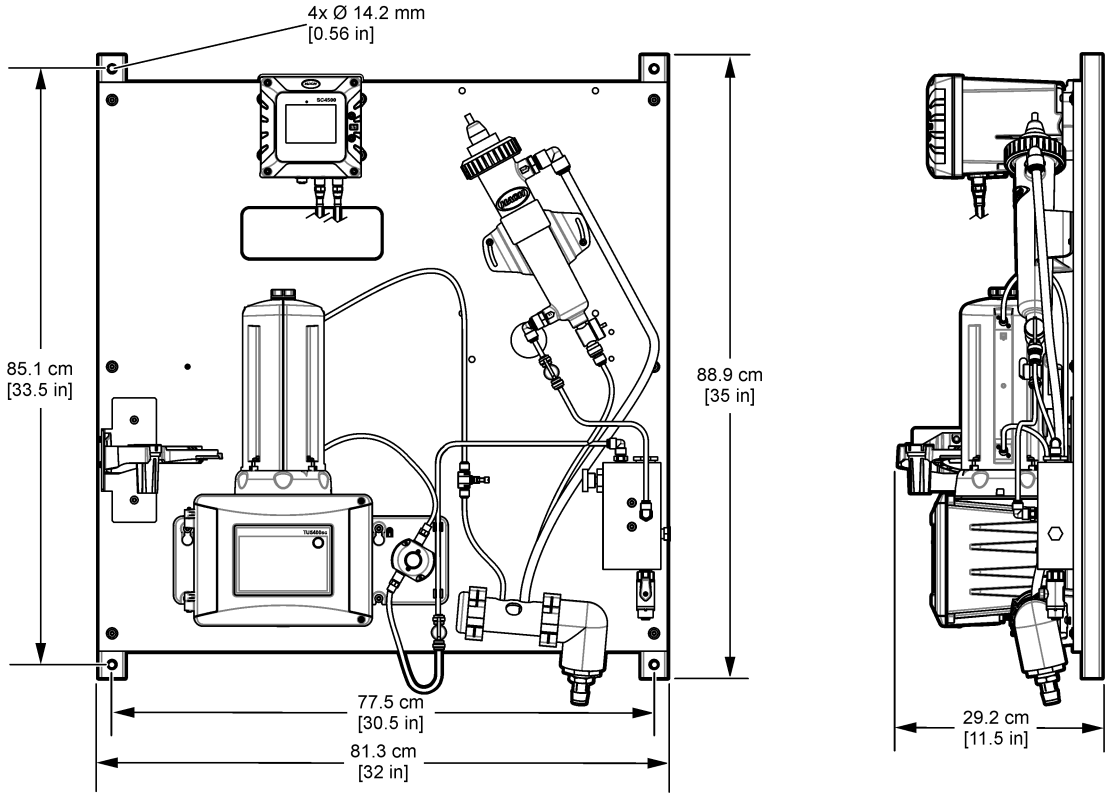


**Figure 76 Hang the panel on a wall**

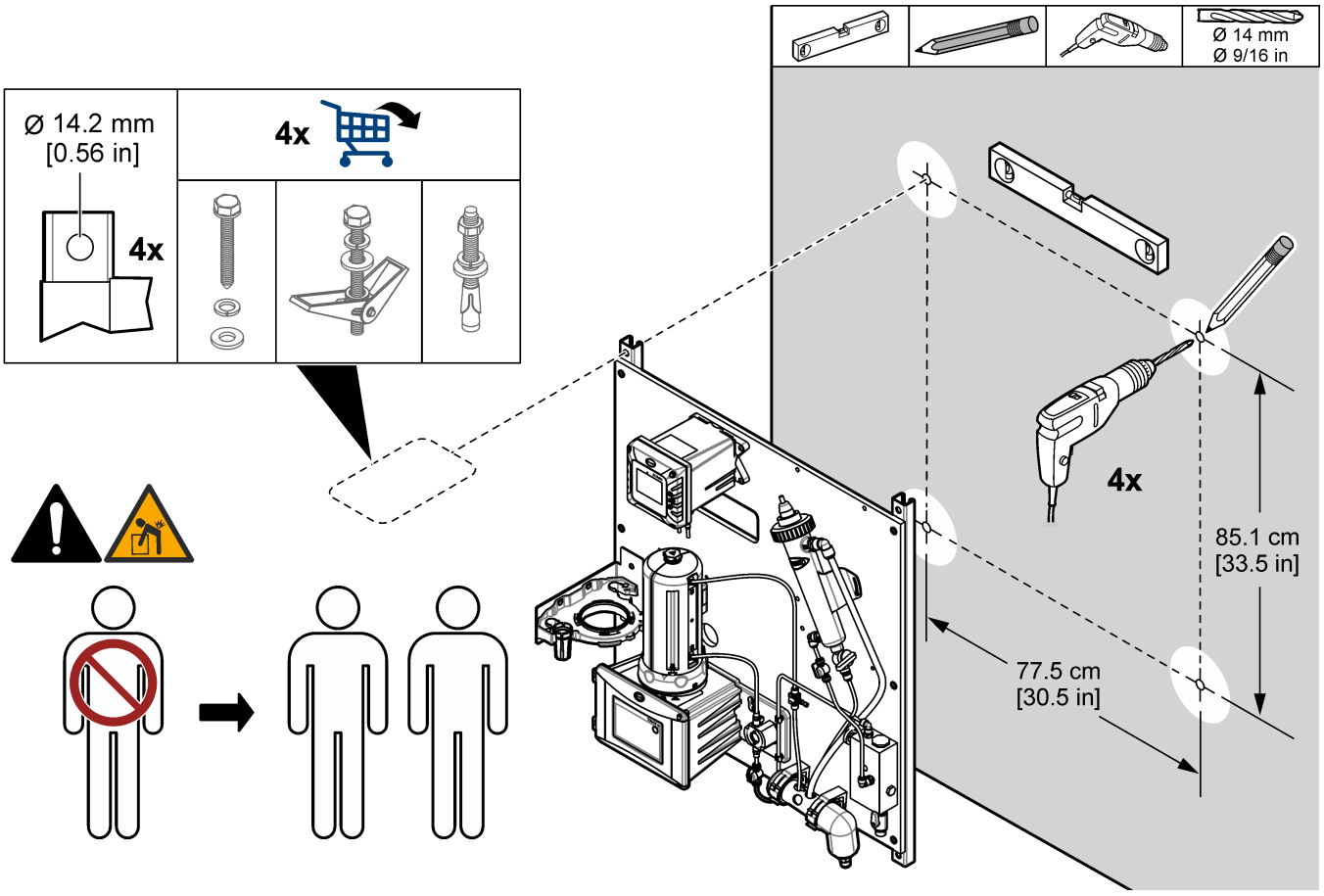

### 10.4.3 Install the sample and drain lines

Install the sample and drain tubing as shown in Figure 77. Make sure that the drain tubing has a constant downward slope to the external drain.

**Figure 77 Sample and drain connections**

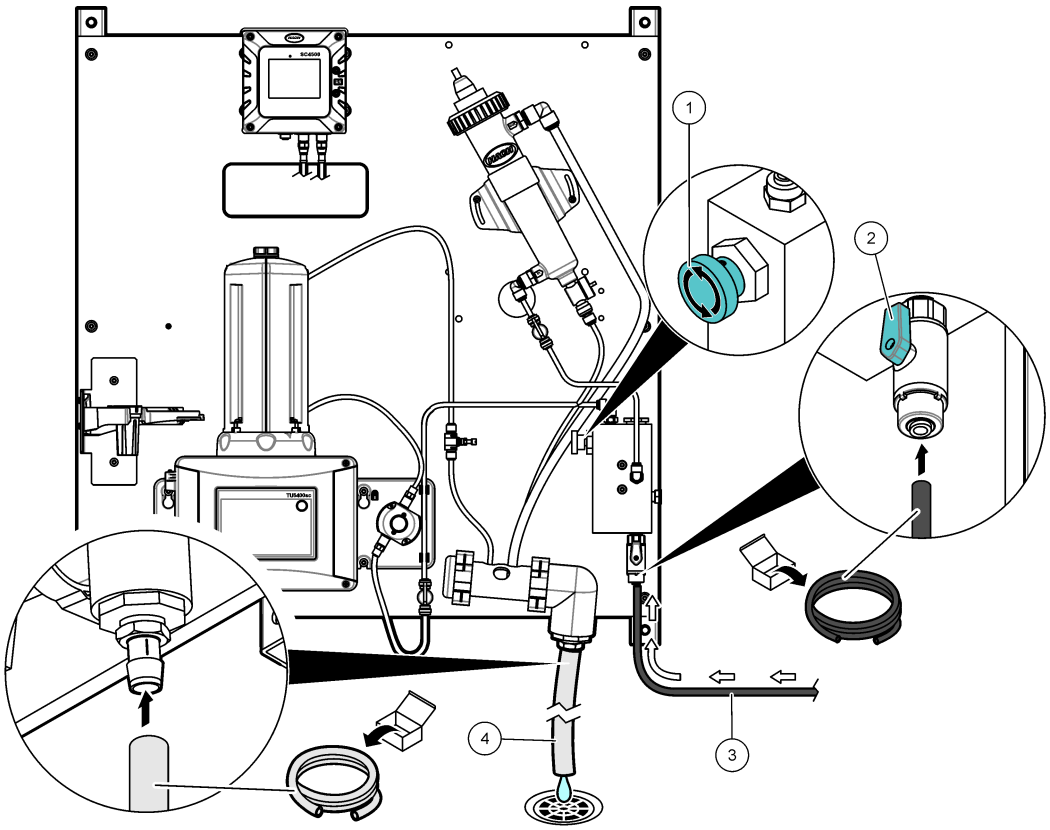


| | |
|---|---|
| **1** Inlet needle valve | **3** Sample tubing |
| **2** Inlet ball valve | **4** Drain tubing |

### 10.4.4 Remove the cap from the pH sensor

Remove the protective cap from the pH sensor before startup. Refer to Figure 78.

***Note:*** *During cold weather, the manufacturer may send the pH sensor in a different package.*

**Figure 78 Remove the cap from the pH sensor**

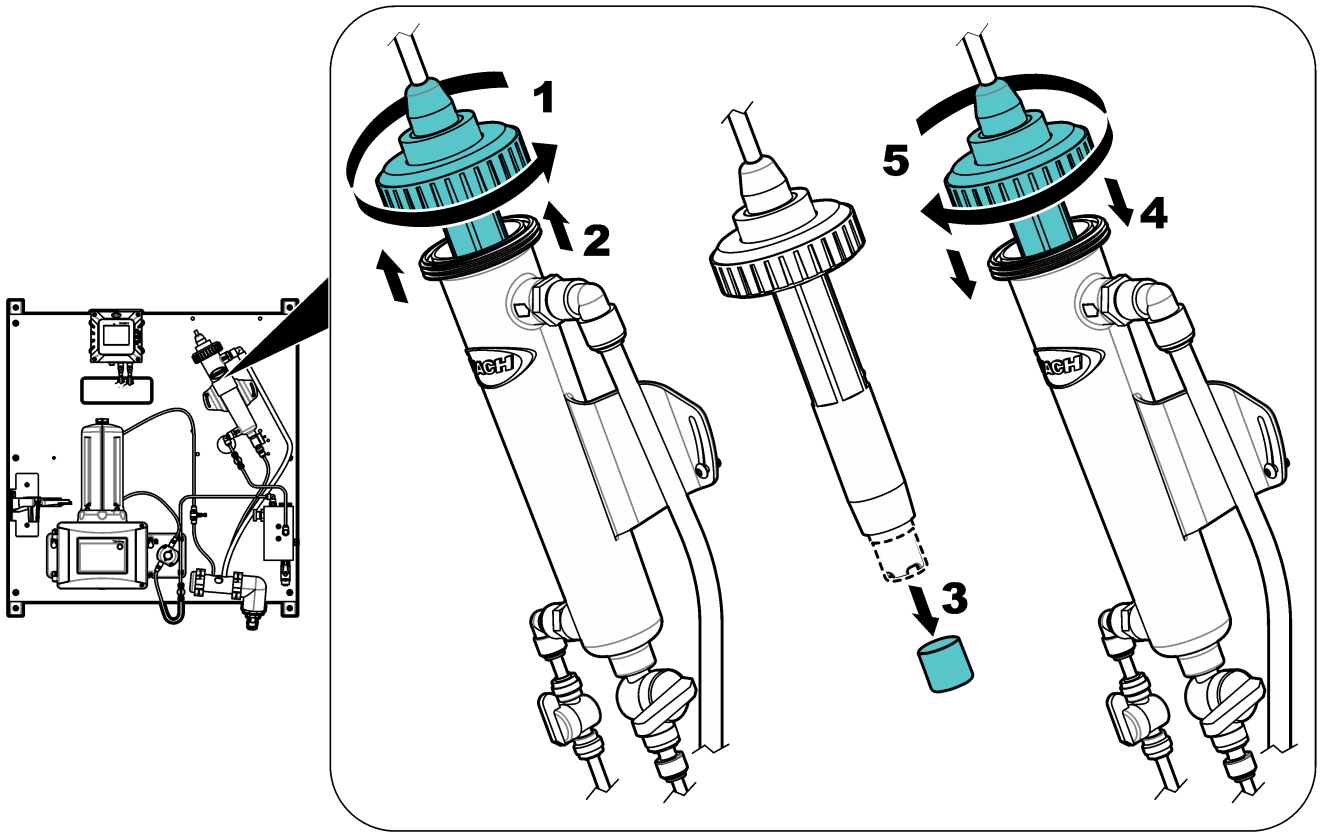


## 10.5 Startup

Make sure that all of the plumbing connections are complete before startup.

1. Open the sample inlet valve to let sample flow through the plumbing system. Make sure that the flow rate and pressure are within the limits. Refer to Specifications on page 91.
2. Examine the plumbing for fluid leaks. Stop the leaks if found.
3. Apply power to the controller. Refer to Figure 79. The display light comes on. The connected sensor shows on the display.

   ***Note:*** *To supply AC power to the controller with conduit, refer to the controller user manual.*
4. Set the flow rate as follows:

   a. Measure the flow rate with the flow regulator fully open. Make sure that the flow rate is in the middle of the flow specification. Refer to Specifications on page 91.

   b. Slowly close the flow regulator until the flow decreases by 20 to 30%.

   ***Note:*** *The flow regulator causes back pressure in the tubing and decreases the quantity of bubbles that can form in the vial.*
5. Let the panel operate for 4 to 6 hours until the measurements become stable.

**Figure 79 Apply power**

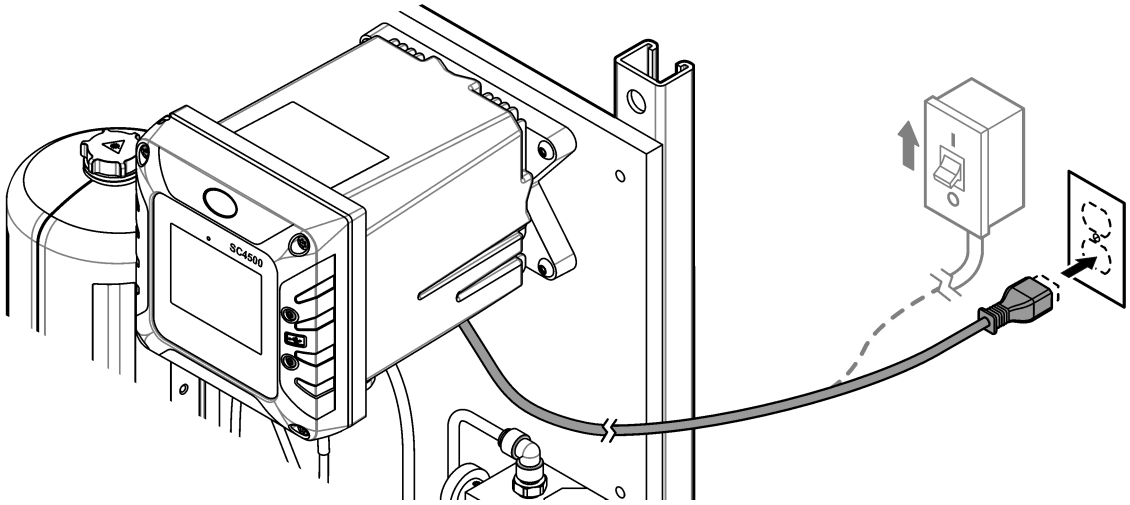


## 10.6 Operation

After the startup procedure is complete and the measurements are stable, monitor the measurements regularly. Measure grab samples to make sure that the measurements are accurate.

## 10.7 Replacement parts and accessories

***Note:*** *Product and Article numbers may vary for some selling regions. Contact the appropriate distributor or refer to the company website for contact information.*

| Description | Item no. |
|---|---|
| Tubing, 0.170-inch ID × 0.250-inch OD | 3061600A |

# Section 11 DPMP-POFTX

## 11.1 Product overview

The Dual Parameter Monitoring Panel for phosphate (DPMP-POFTX) is a phosphate analyzer and filtration system that are installed on a panel. The user mounts the panel, then installs the immersion pole with the connected filter module holder on the panel. Refer to Figure 80. The controller on the panel sends the data to a communications network for remote monitoring. An optional Solitax turbidity sensor can connect to the controller.

**Figure 80 DPMP-POFTX overview**

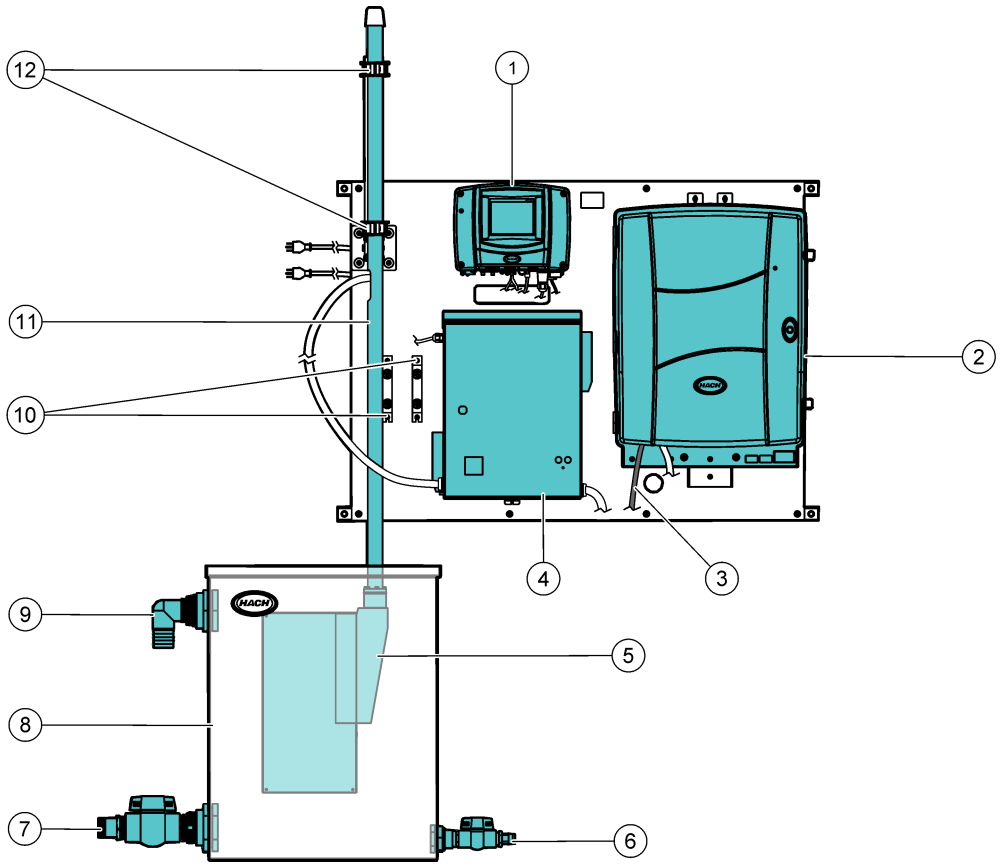


| | |
|---|---|
| **1** SC1000 Controller | **7** Outlet ball valve, 2-inch hose barb |
| **2** Phosphax sc LR phosphate analyzer | **8** Tank assembly, 95 L (25 gallon) |
| **3** Analyzer drain | **9** Overflow drain, 2-inch hose barb |
| **4** Filtrax control unit | **10** Spacers |
| **5** Filter module holder | **11** Immersion pole |
| **6** Inlet ball valve, 1-inch hose barb | **12** Mounting clamps for immersion pole |

## 11.2 Specifications

Specifications are subject to change without notice. The specifications that follow are for the DPMP-POFTX panel. Refer to the supplied user manuals for the controller, filter and analyzer specifications.

| Specification | Details |
|---|---|
| Dimensions (W x H x D) | Panel: 129.5 x 91.4 x 45.7 cm (51 x 36 x 18 inch)<br>Tank: 61.6 x 79.5 x 22.2 cm (24.25 x 31.30 x 8.75 inch) |
| Weight | 101 kg (222 lb) with installed reagents, Filtrax system and optional Solitax sensor;<br>68 kg (150 lb) without reagents, Filtrax system and optional Solitax sensor. |
| Power requirements | SC1000 Controller: 100–240 (±10) VAC, 50/60 Hz; maximum 1000 VA |
| | Filtrax: 115 (±10) VAC, 50/60 Hz, maximum 2100 VA |
| | Phosphax sc: 115–230 VAC, 500 VA, 4.35 A |
| Sample flow rate through tank assembly | 40.0 L/minute (10.6 gallons/minute) maximum |
| Sample inlet connection | 1-inch ID hose barb |
| Sample waste drain connection | 2-inch ID hose barb |
| Certifications | SC1000 Controller is CE compliant and is TÜV listed to UL and CSA safety standards |
| | Filtrax is TÜV listed to UL and CSA safety standards |
| | Phosphax sc is TÜV listed to UL and CSA safety standards |

## 11.3 Product components

Make sure that all components have been received. Refer to Figure 81. If any items are missing or damaged, contact the manufacturer or a sales representative immediately.

**Figure 81 Product components**

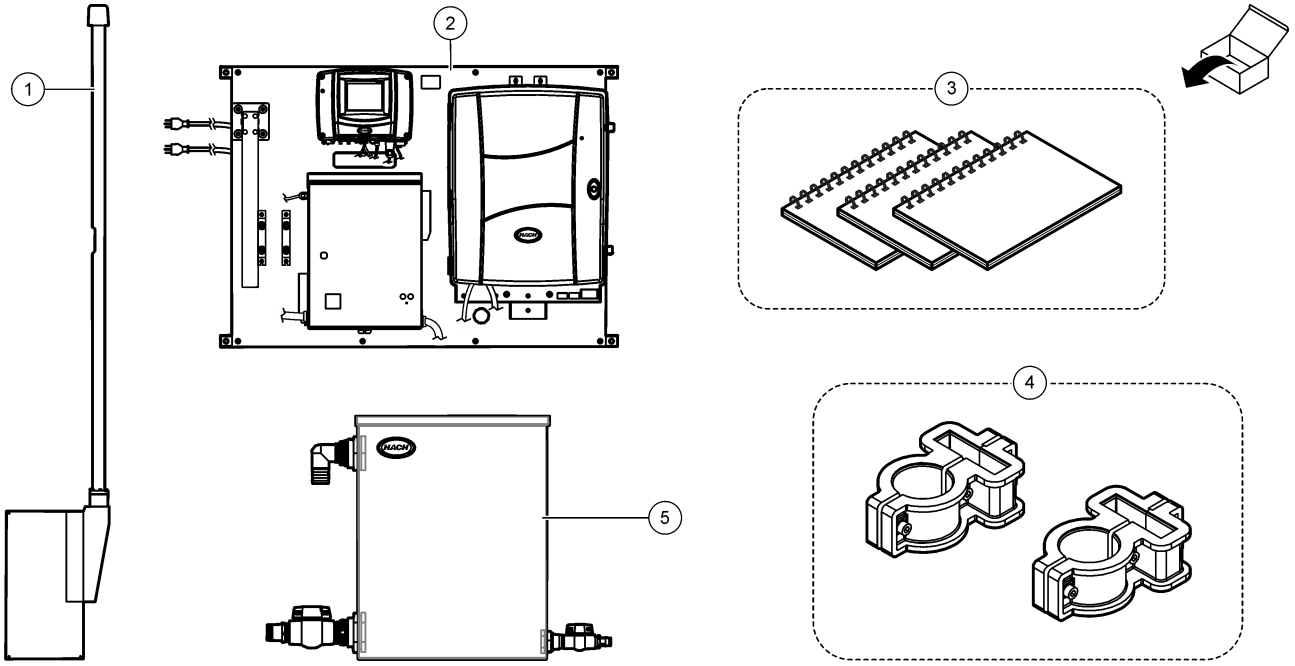


| | |
|---|---|
| **1** Filter module holder with immersion pole | **4** Mounting clamps for immersion pole |
| **2** DPMP-POFTX water panel | **5** Tank assembly, 95 L (25 gallon) |
| **3** User manuals | |

## 11.4 Installation

**⚠WARNING**

Multiple hazards. Only qualified personnel must conduct the tasks described in this section of the document.

### 11.4.1 Mounting

**⚠WARNING**

Personal injury hazard. Make sure that the wall mounting is able to hold 4 times the weight of the equipment.

**⚠WARNING**

Personal injury hazard. Instruments or components are heavy. Use assistance to install or move.

Attach the panel on a flat, vertical wall surface in an indoor location away from direct sunlight. Then, install the immersion pole on the panel with the connected filter module holder in the tank assembly. Install the instrument in a location and position where the user can easily disconnect the instrument from the power source. Refer to Figure 82 for product dimensions. Refer to the illustrated steps that follow to attach the panel to a wall. Mounting hardware is supplied by the user.

**Figure 82 Product dimensions**

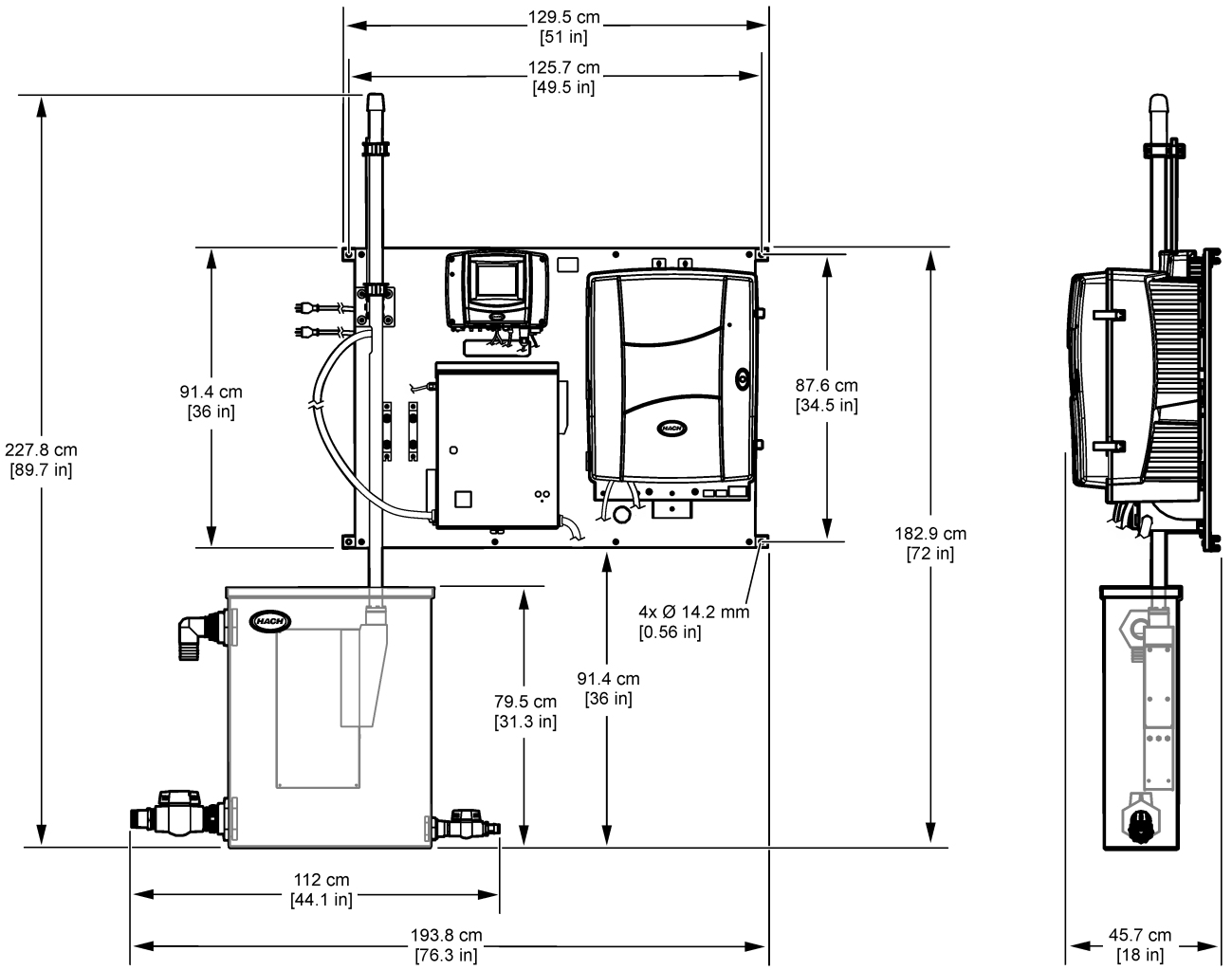

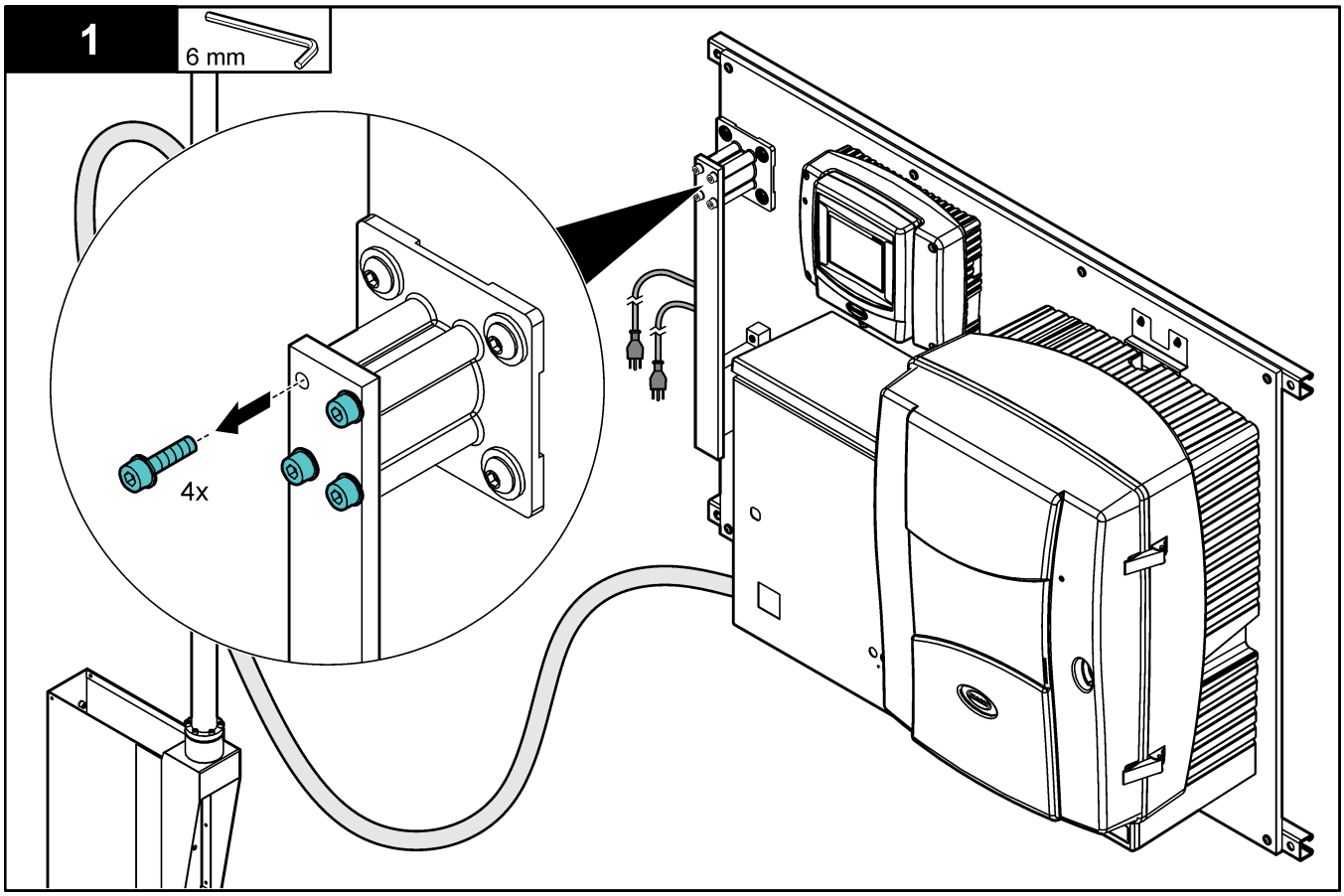
1
6 mm
4x

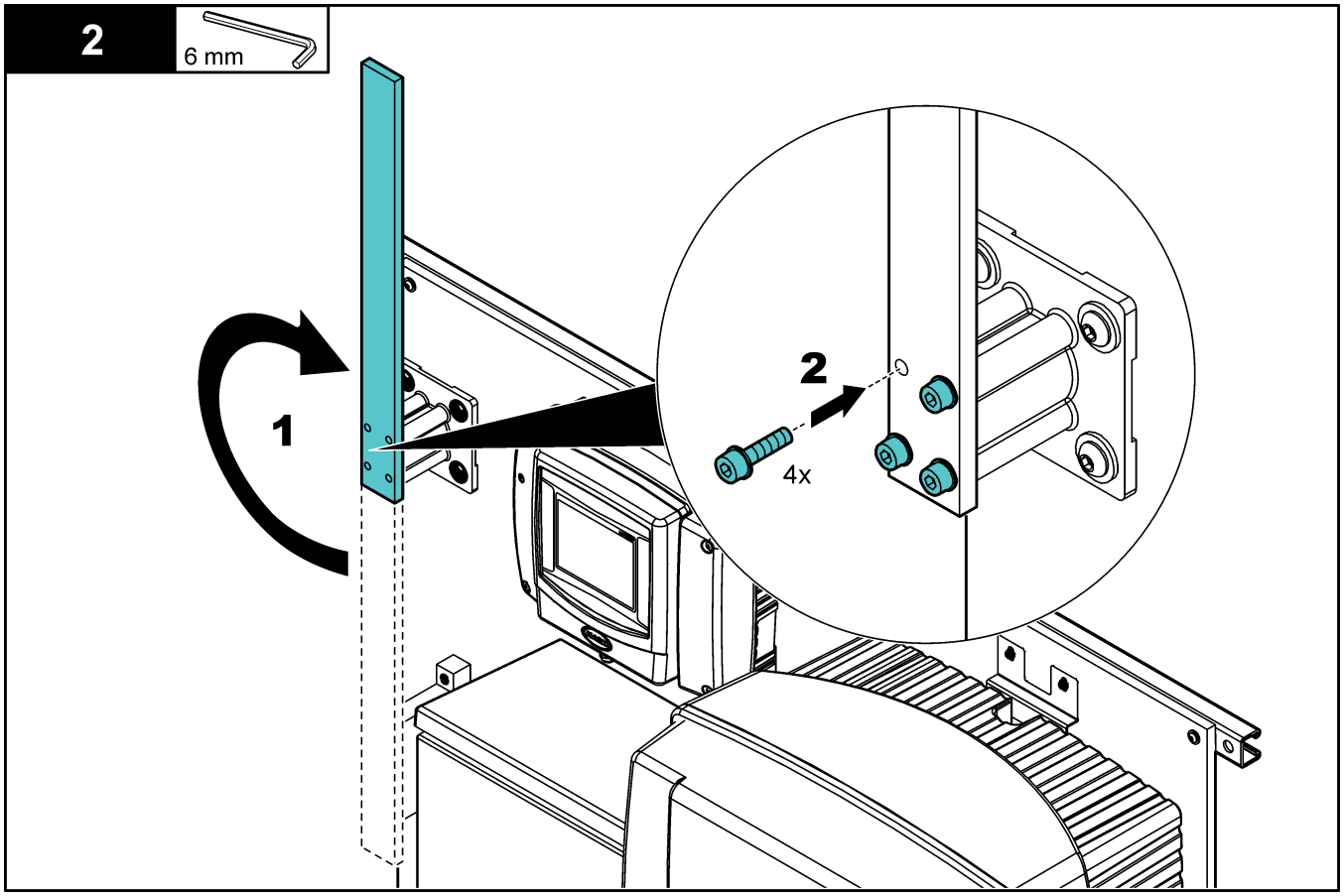
2
6 mm
1
2
4x

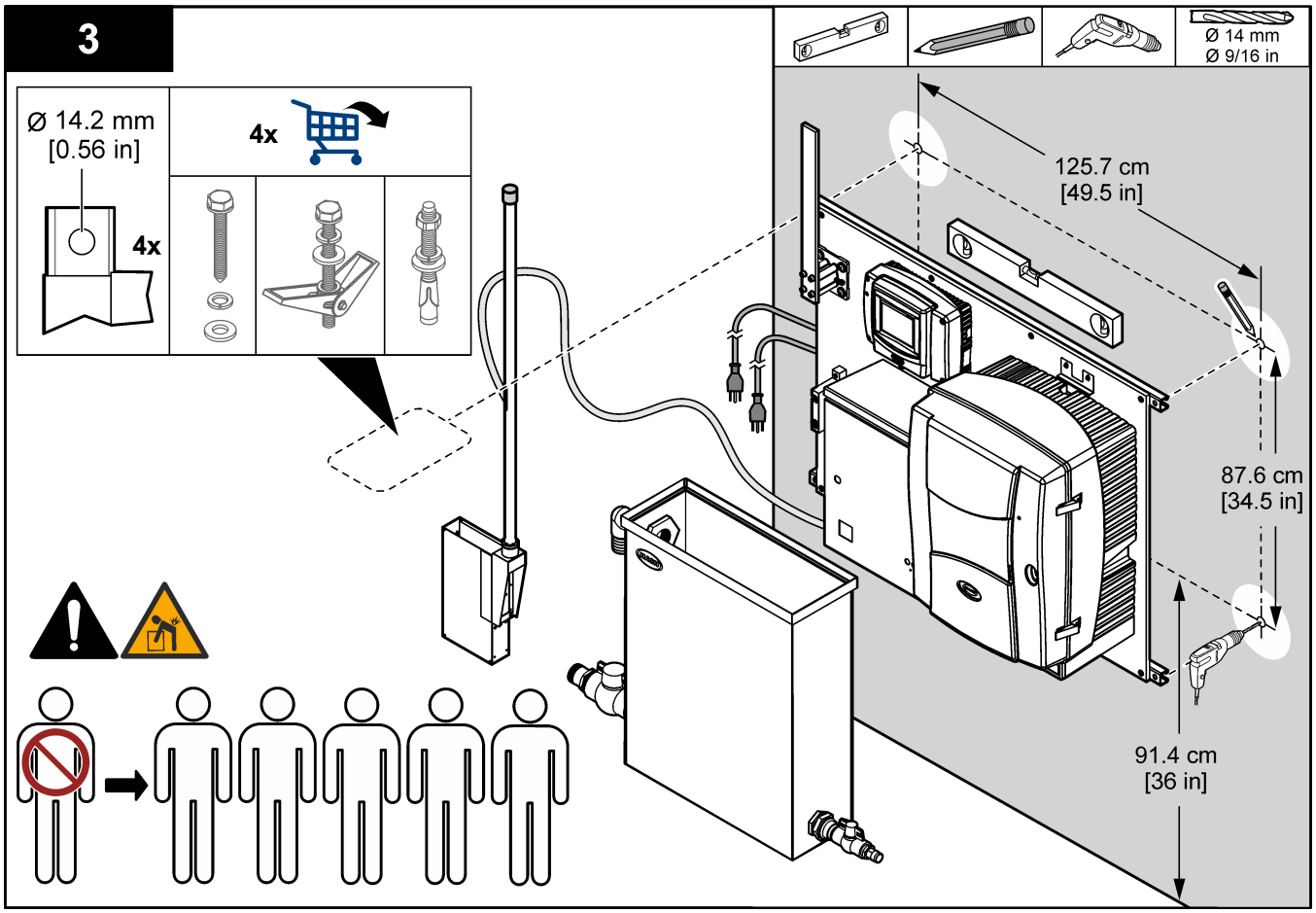
3
Ø 14.2 mm
[0.56 in]
4x
4x
Ø 14 mm
Ø 9/16 in
125.7 cm
[49.5 in]
87.6 cm
[34.5 in]
91.4 cm
[36 in]

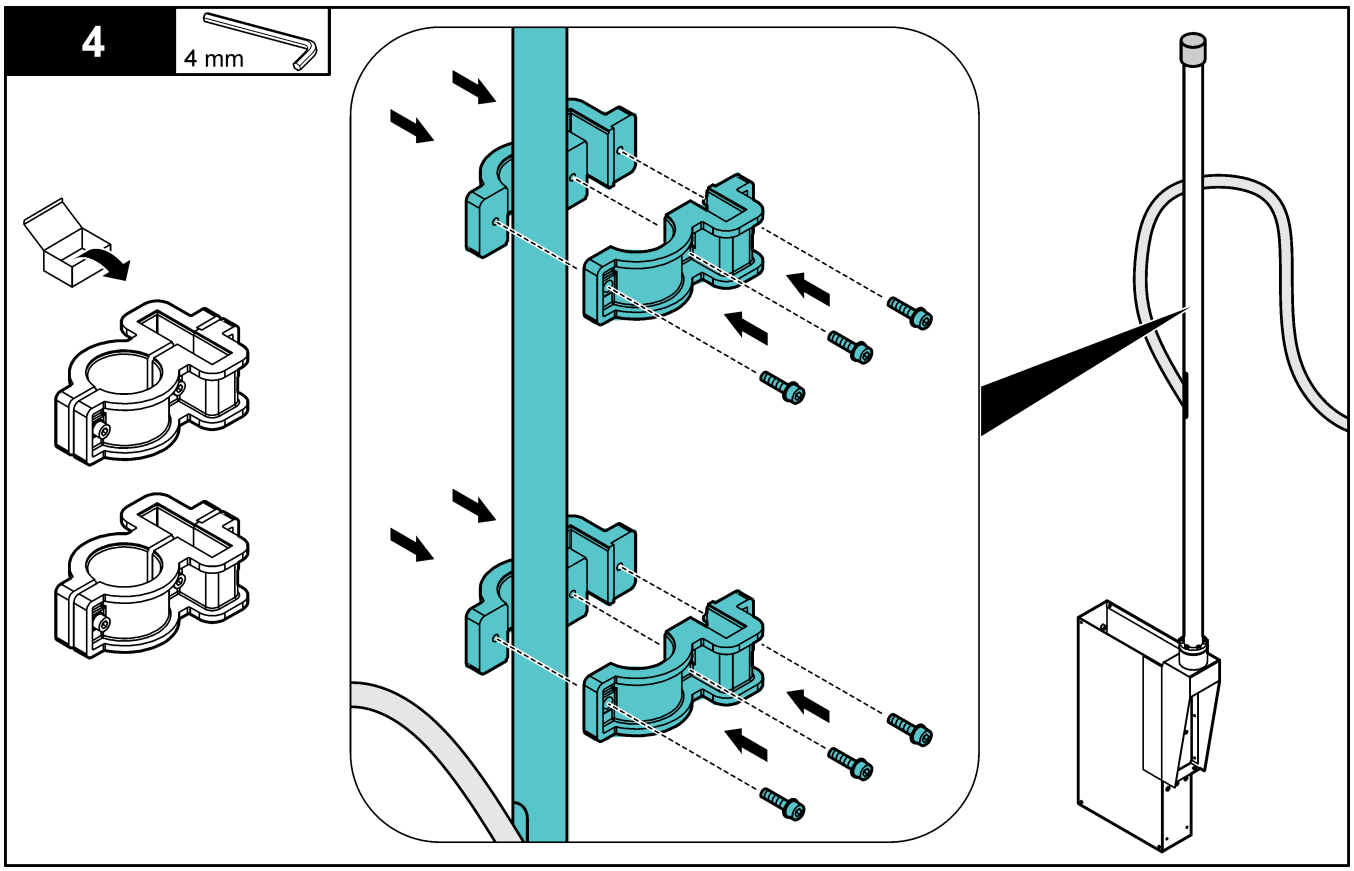
4
4 mm

5

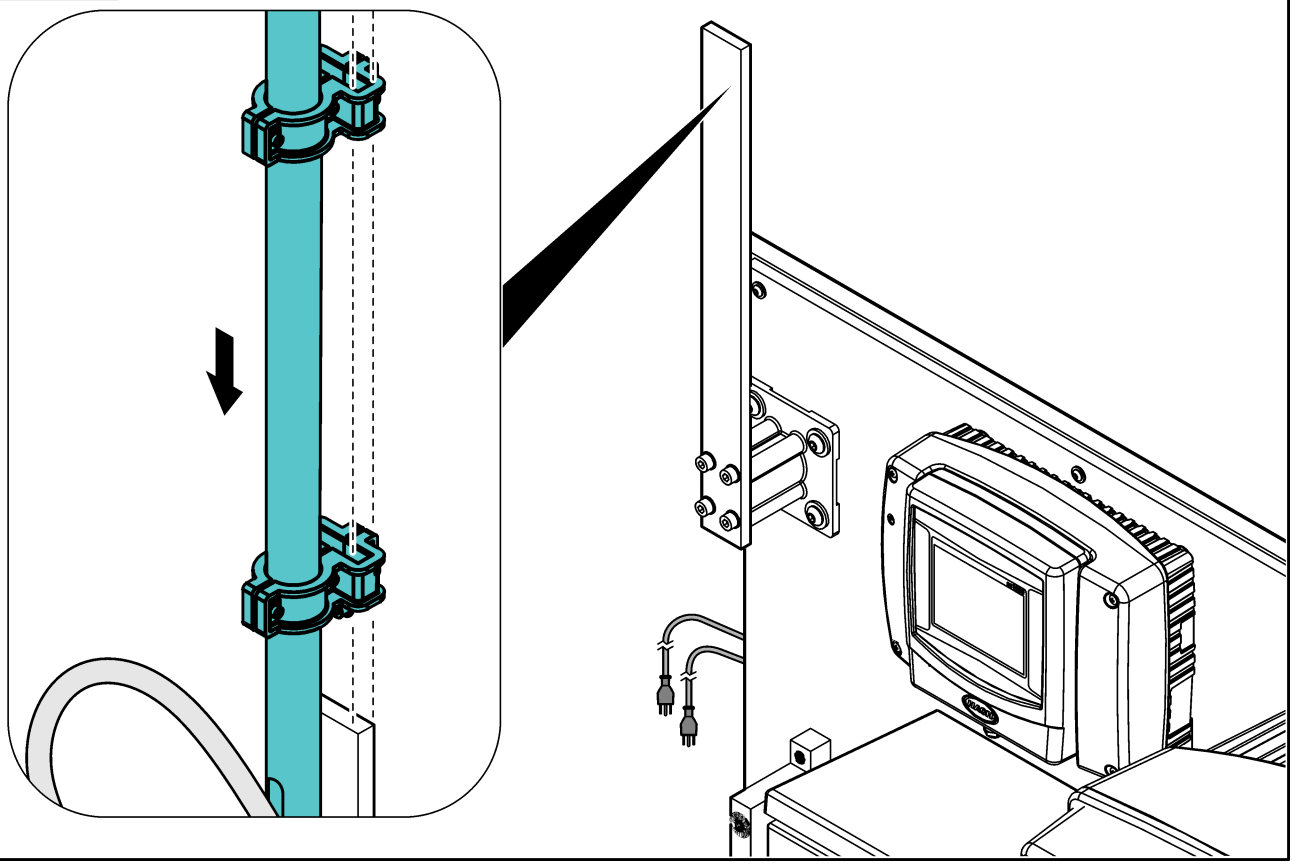

6

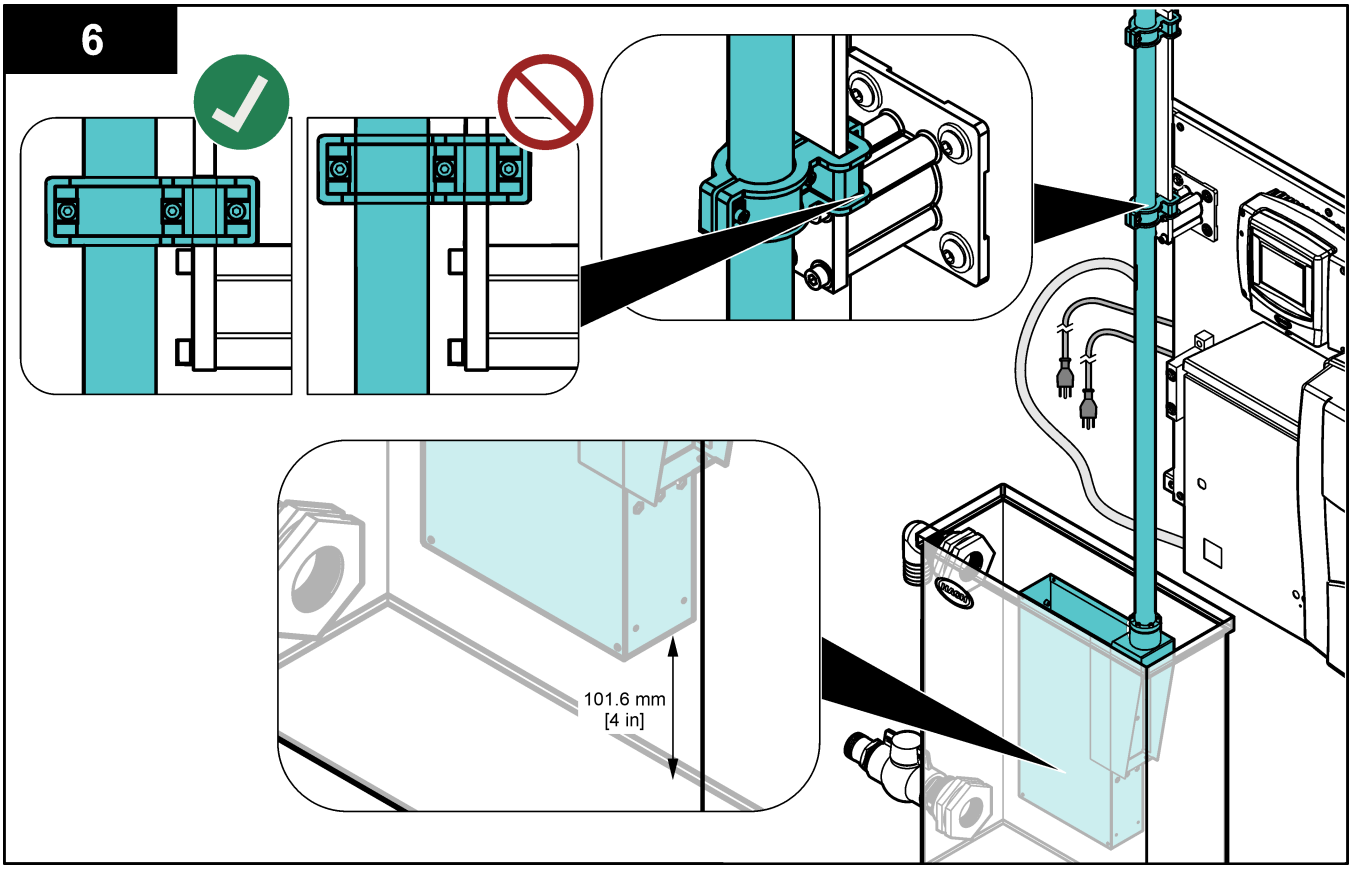

### 11.4.2 Install the sample and drain lines

Install the sample and drain tubing as shown in Figure 83. Make sure that the drain tubing has a constant downward slope to the external drain.

**Figure 83 Sample and drain connections**

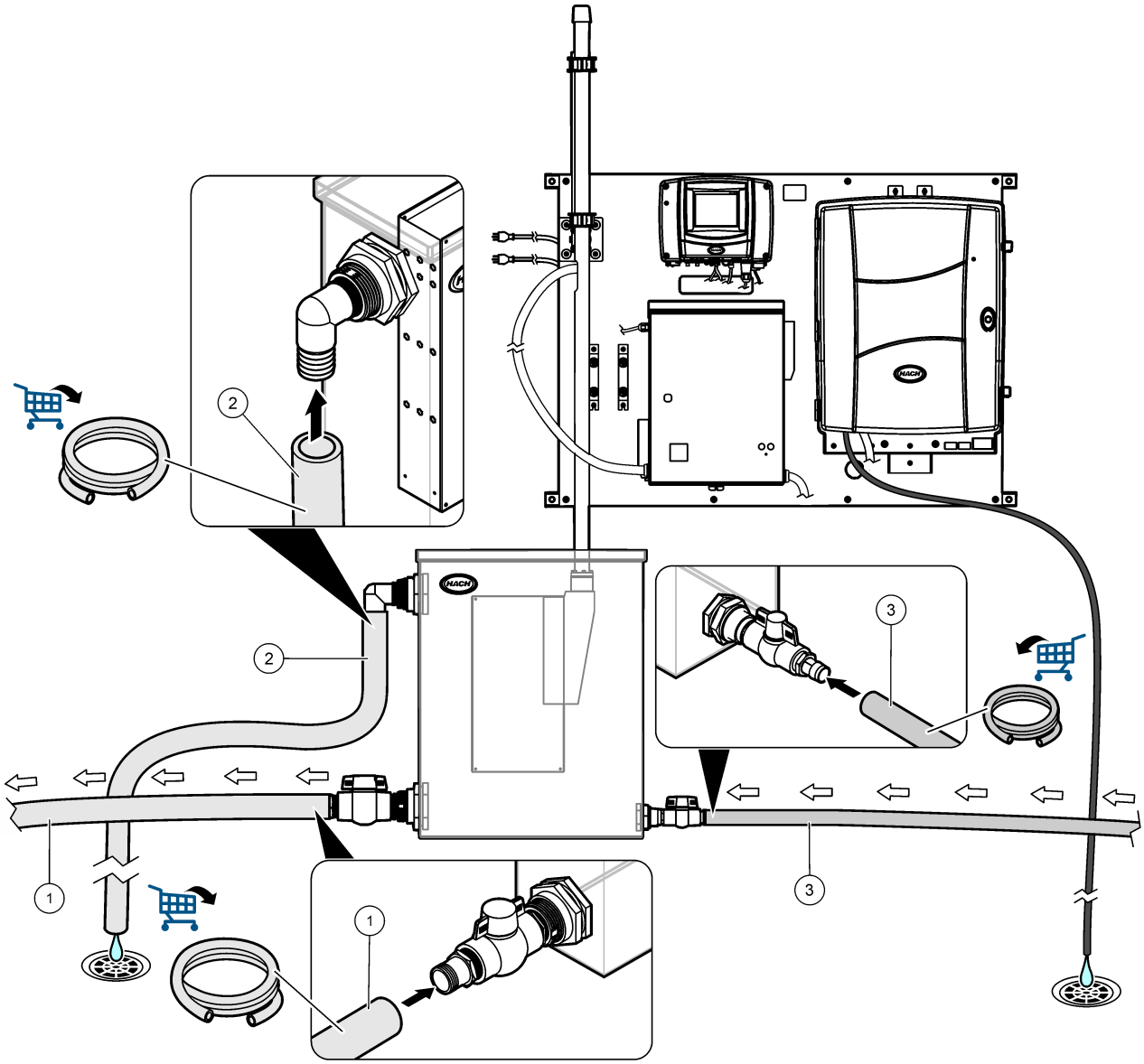


| | |
|---|---|
| **1** Outlet: 2-inch ID, 2-3/8-inch OD tubing | **3** Inlet: 1-inch ID, 1-5/16-inch OD tubing |
| **2** Drain: 2-inch ID, 2-3/8-inch OD tubing | |

## 11.5 Startup

Make sure that all of the plumbing connections are complete before startup.

1. Install the filter modules in the Filtrax filter holder. Refer to the Filtrax user manual.
2. Make sure that the pump cartridges are installed in the Filtrax control unit. Refer to the Filtrax user manual.
3. Make sure that the collecting tray is installed in the analyzer. Make sure that the humidity sensor is connected in the analyzer. Refer to the analyzer user manual.

4. Install the prepared reagents, cleaning and standard solutions in the analyzer. Refer to the analyzer user manual. Close the analytics panel and door when done.
5. Open the inlet valve on the tank assembly to let sample flow through the tank. Make sure that the flow rate and pressure are within the limits. Refer to Specifications on page 100.
6. Examine the plumbing for fluid leaks. Stop the leaks if found.
7. Apply power to the Filtrax control unit. Refer to Figure 84.
8. Set the parameters for the Fitrax control unit. Refer to the Filtrax user manual.
9. Apply power to the controller. The display light comes on. The analyzer shows on the controller display.
   ***Note:*** *To supply AC power to the controller with conduit, refer to the controller user manual.*
10. Start the prepumping sequence. Refer to the analyzer user manual.
11. Start a manual calibration. Refer to the analyzer user manual.
12. Let the panel operate for 4 to 6 hours until the measurements become stable.

**Figure 84 Apply power**

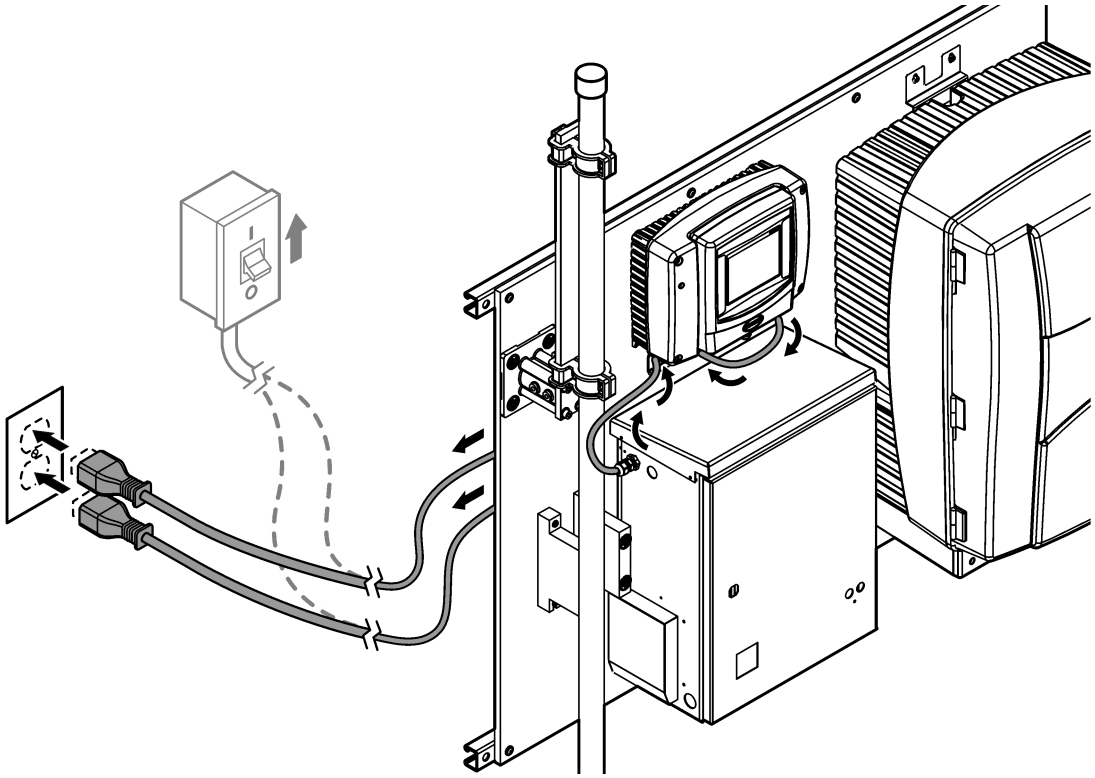

## 11.6 Operation

After the startup procedure is complete and the measurements are stable, monitor the measurements regularly. Measure grab samples to make sure that the measurements are accurate.

**HACH COMPANY World Headquarters**
P.O. Box 389, Loveland, CO 80539-0389 U.S.A.
Tel. (970) 669-3050
(800) 227-4224 (U.S.A. only)
Fax (970) 669-2932
orders@hach.com
www.hach.com

**HACH LANGE GMBH**
Willstätterstraße 11
D-40549 Düsseldorf, Germany
Tel. +49 (0) 2 11 52 88-320
Fax +49 (0) 2 11 52 88-210
info-de@hach.com
www.de.hach.com

**HACH LANGE Sàrl**
6, route de Compois
1222 Vésenaz
SWITZERLAND
Tel. +41 22 594 6400
Fax +41 22 594 6499




© Hach Company/Hach Lange GmbH, 2024–2026. All rights reserved.
Original instructions.