NOTES:

1. ALL PARTS, MATERIALS AND PROCESSES SHALL COMPLY WITH HACH'S RESTRICTED MATERIALS SUPPLIER SPECIFICATION DOCUMENT, HACH P/N 8600000.

REVISION			
REV	DESCRIPTION	ECO #	DATE
C	RELEASED PER ECO	C132509	6/5/2023

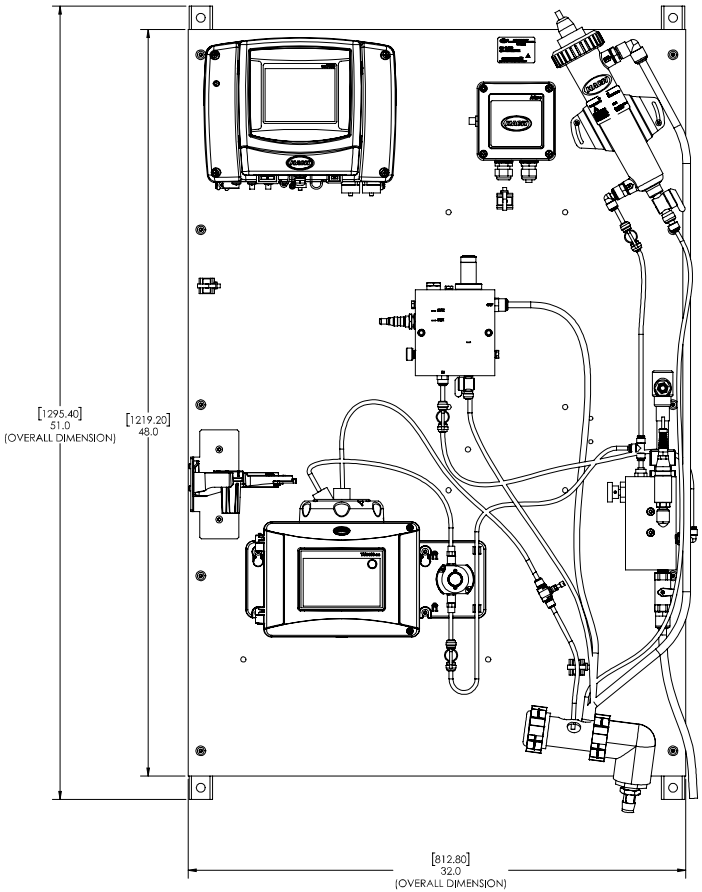

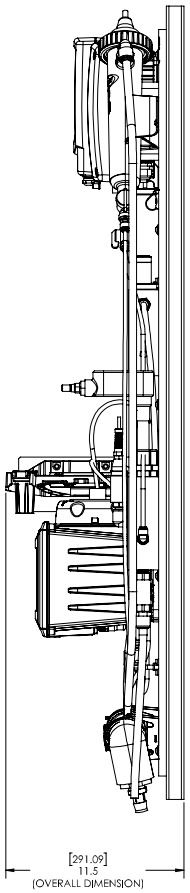

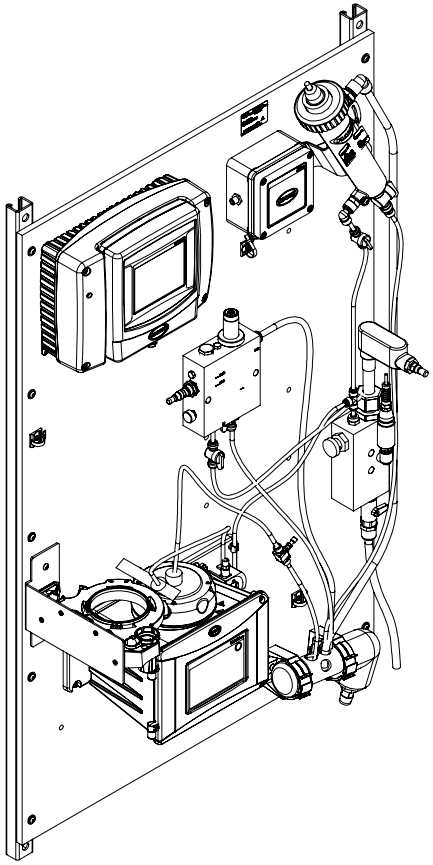

PART CLASSIFICATION: MINOR B	THE SOLID CAD FILE IS THE CONTROLLING AUTHORITY FOR ALL DIMENSIONS. UNLESS OTHERWISE SPECIFIED: DIMENSIONS ARE IN INCHES [MM] TOLERANCES: X ± .03, .X ± .13, .XX ± .010, .XXX ± .005, ANGLES ± 1.0° ALL VISUAL PART REVIEWS (V.A.) ARE BASED ON SAMPLE MODELS AS FOLLOWS: FOR FEATURES < 4.0" FOR FEATURES > 4.0" <10.0" FOR FEATURES > 10.0"		NAME / DATE	HACH COMPANY 5600 LINDBERGH DR. LOVELAND, CO. 80538
MATERIAL:		ENGINEER	P. SHETTY 06/20/2019	TITLE: WDMP, SIX SENSORS, TU5300sc W/O ACM & CLT10sc
HACH MATERIAL PART NUMBER		DRAWN	S. BHAM 3/5/2018	
NOTICE: HACH COMPANY OWNS PROPRIETARY RIGHTS IN THE INFORMATION DISCLOSED ON THE DRAWINGS. THE RIGHTS TO USE, REPRODUCE, OR DISCLOSE THE DRAWINGS OR INFORMATION THEREON, IN WHOLE OR IN PART, BE USED TO MANUFACTURE ANYTHING, WHETHER OR NOT SHOWN HEREON, REPRODUCED OR DISCLOSED TO ANYONE WITHOUT DIRECT PERMISSION FROM HACH COMPANY.		CHECKED		
		PRODUCT MGR	Benjamin Sattler 6/5/2023	
		INTERPRET GEOMETRIC TOLERANCING PER: ASME Y14.5M-1994		
		THIRD ANGLE PROJECTION		SIZE D, DWG. NO. 8867600, REV C
		DO NOT SCALE DRAWING		SCALE: 1:4, SHEET 1 OF 2