8828000

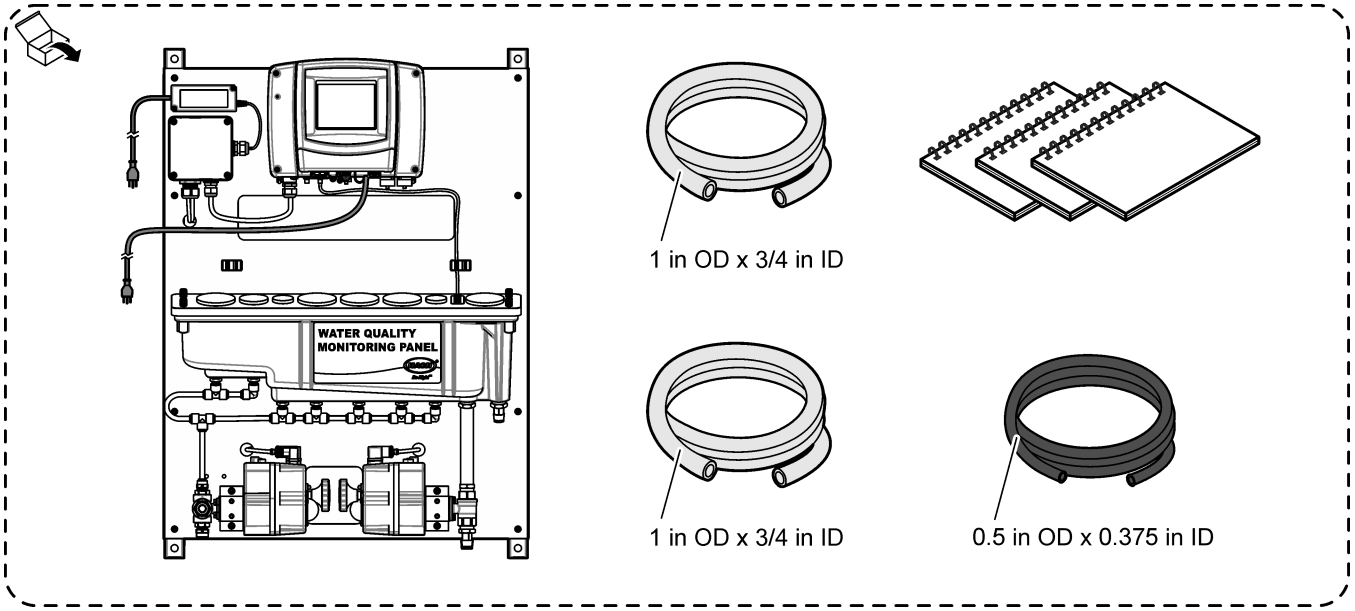

EN: WARNING! Personal injury hazard. Instruments or components are heavy. Use assistance to install or move.

CAUTION! Personal injury hazard. Make sure that the wall mounting is able to hold 4 times the weight of the equipment.

Weight: 39.5 kg (87 lb). Use a standard garden hose for the flush line.

FR: AVERTISSEMENT! Risque de blessures corporelles. Les instruments ou les composants sont lourds. Ne pas installer ou déplacer seul.

ATTENTION! Risque de blessures corporelles. Vérifiez que le montage mural est capable de supporter 4 fois le poids de l'équipement.

Poids : 39,5 kg (87 lb). Utiliser un tuyau d'arrosage standard pour la conduite de rinçage.

ES: ADVERTENCIA! Peligro de lesión personal. Los instrumentos o los componentes son pesados. Pida ayuda para instalarlos o moverlos.

PRECAUCIÓN! Peligro de lesión personal. Asegúrese de que el soporte de pared puede soportar un peso 4 veces superior al del equipo.

Peso: 39,5 kg (87 lb). Utilice una manguera de jardín estándar para la línea de descarga.

PT-BR: ADVERTÊNCIA! Risco de lesão corporal. Os instrumentos ou componentes são pesados. Use assistência para instalar ou mover os instrumentos.

CUIDADO! Risco de lesão corporal. Certifique-se de que a montagem em parede é capaz de suportar 4 vezes o peso do equipamento.

Peso: 39,5 kg (87 lb). Use uma mangueira de jardim padrão para a linha de descarga.

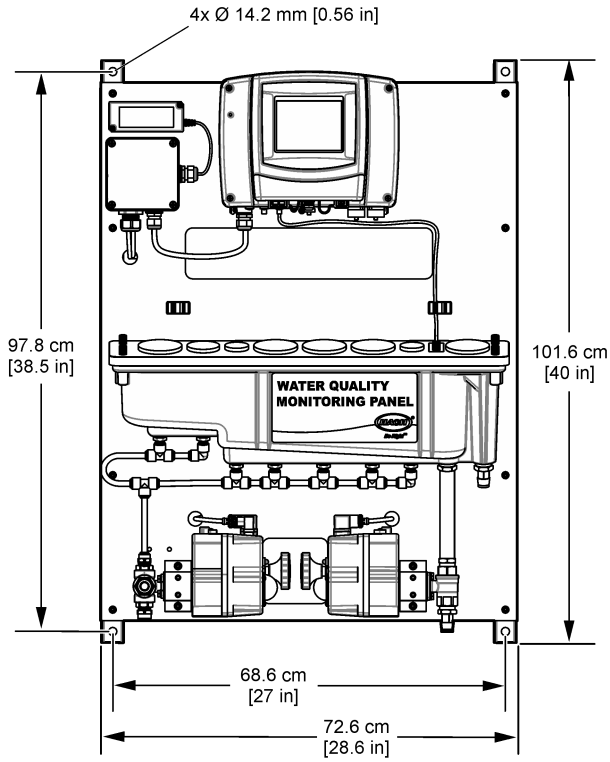
4x Ø 14.2 mm [0.56 in]
97.8 cm
[38.5 in]
101.6 cm
[40 in]
WATER QUALITY
MONITORING PANEL
68.6 cm
[27 in]
72.6 cm
[28.6 in]

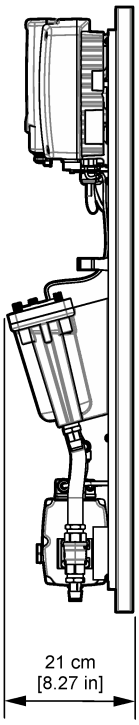
21 cm
[8.27 in]

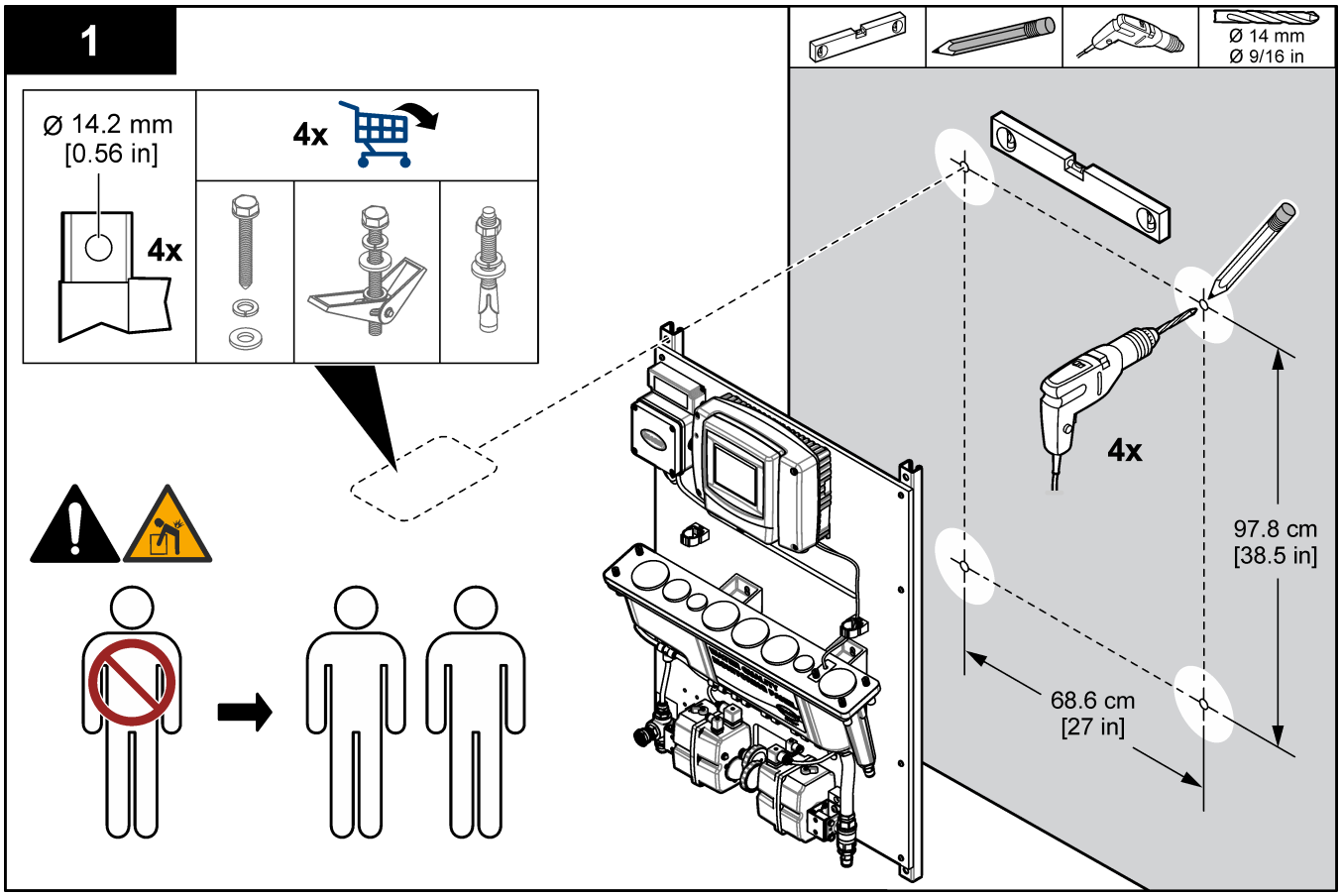
1
Ø 14.2 mm
[0.56 in]
4x
4x
Ø 14 mm
Ø 9/16 in
4x
97.8 cm
[38.5 in]
68.6 cm
[27 in]

2

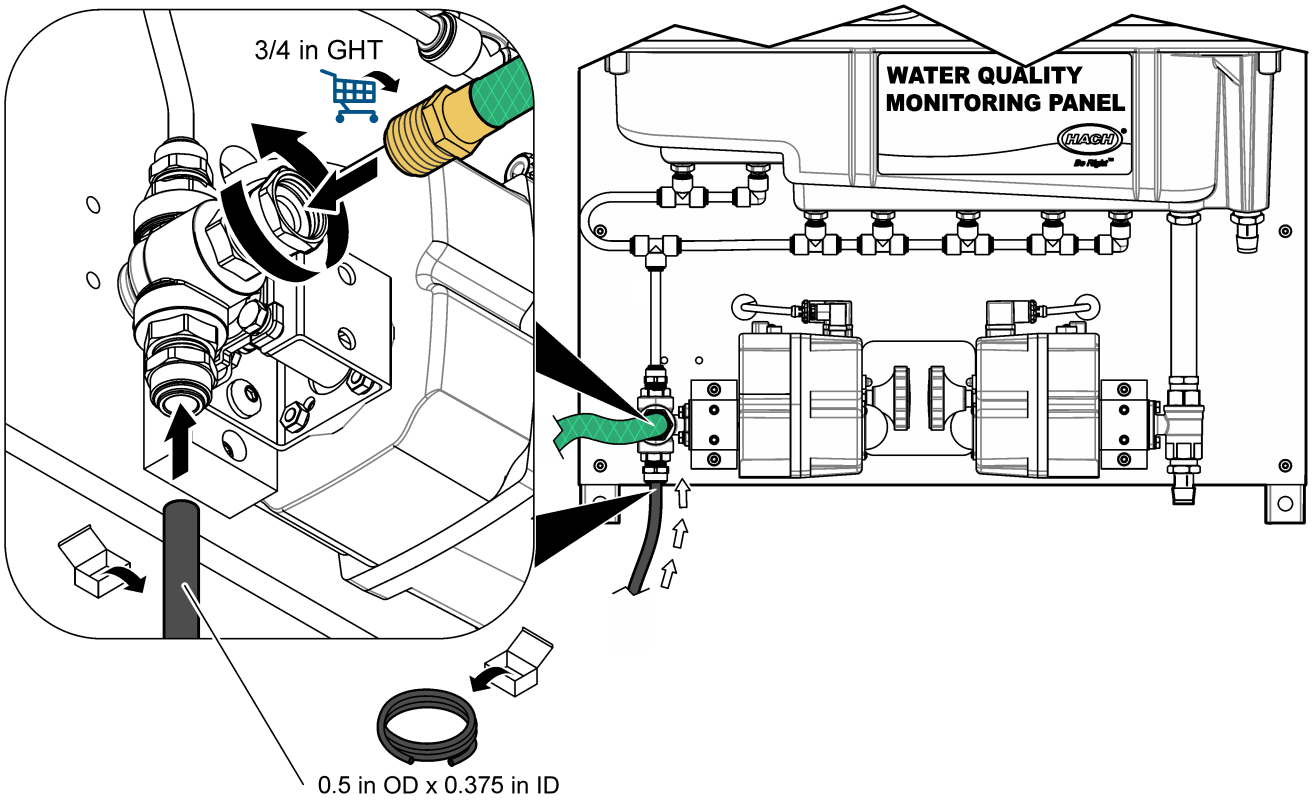
3/4 in GHT
WATER QUALITY
MONITORING PANEL
HACH
0.5 in OD x 0.375 in ID

3

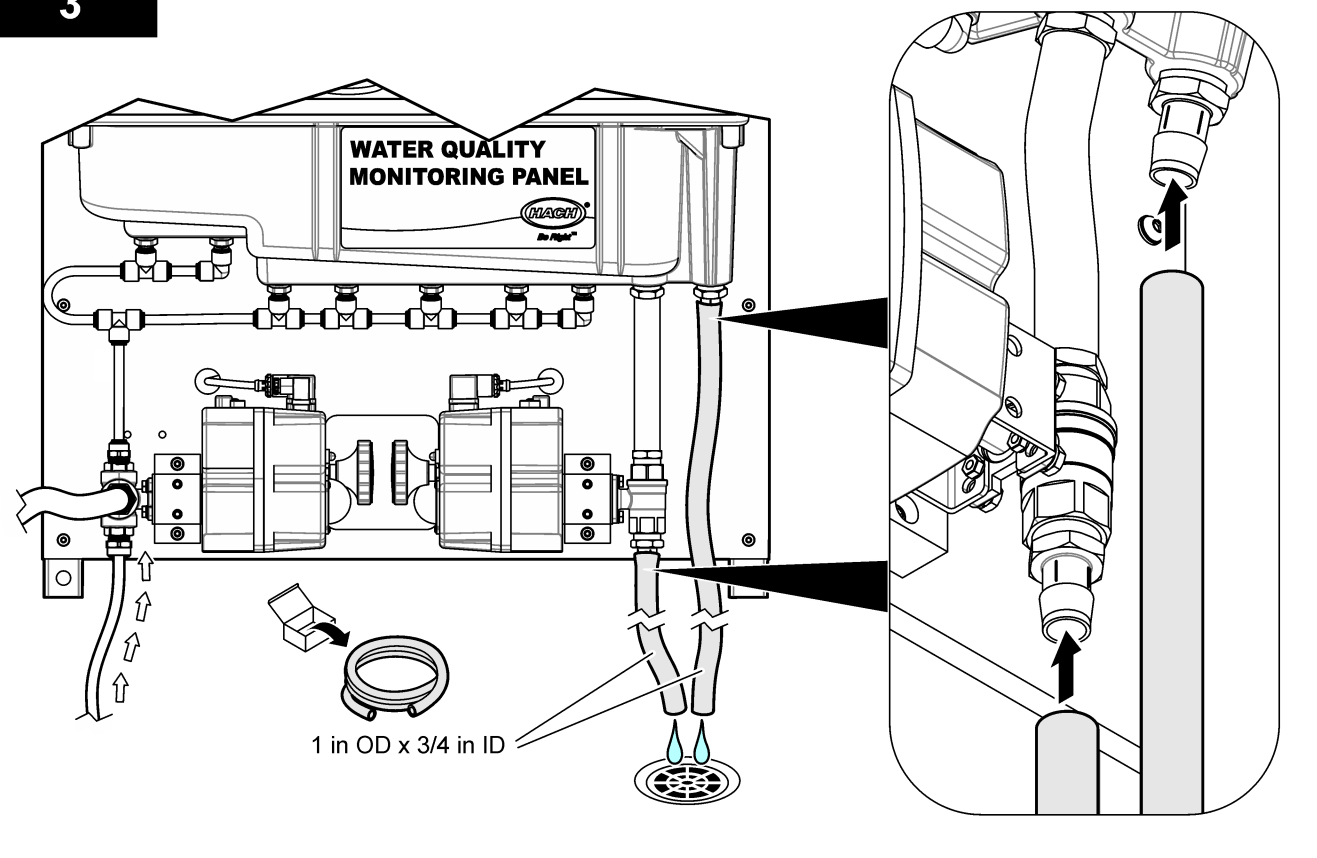
WATER QUALITY
MONITORING PANEL
HACH
1 in OD x 3/4 in ID

EN	User manual (DOC346.53.80706, EN)	User manual (DOC346.77.80706, FR)	User manual (DOC346.61.80706, ES)	User manual (DOC346.90.80706, PT-BR)
FR	Manuel de l'utilisateur (DOC346.53.80706, EN)	Manuel de l'utilisateur (DOC346.77.80706, FR)	Manuel de l'utilisateur (DOC346.61.80706, ES)	Manuel de l'utilisateur (DOC346.90.80706, PT-BR)
ES	Manual del usuario (DOC346.53.80706, EN)	Manual del usuario (DOC346.77.80706, FR)	Manual del usuario (DOC346.61.80706, ES)	Manual del usuario (DOC346.90.80706, PT-BR)
PT-BR	Manual do usuário (DOC346.53.80706, EN)	Manual do usuário (DOC346.77.80706, FR)	Manual do usuário (DOC346.61.80706, ES)	Manual do usuário (DOC346.90.80706, PT-BR)

HACH COMPANY World Headquarters
P.O. Box 389, Loveland, CO 80539-0389 U.S.A.
Tel. (970) 669-3050
(800) 227-4224 (U.S.A. only)
Fax (970) 669-2932
orders@hach.com
www.hach.com

HACH LANGE GMBH
Willstätterstraße 11
D-40549 Düsseldorf, Germany
Tel. +49 (0) 2 11 52 88-320
Fax +49 (0) 2 11 52 88-210
info-de@hach.com
www.de.hach.com

HACH LANGE Sàrl
6, route de Compois
1222 Vésenaz
SWITZERLAND
Tel. +41 22 594 6400
Fax +41 22 594 6499

© Hach Company/Hach Lange GmbH, 2024–2025. All rights reserved. Printed in U.S.A.
09/2025, Edition 2
Original instructions.